This is a digital copy of a book that was preserved for generations on library shelves before it was carefully scanned by Google as part of a project to make the world's books discoverable online.

It has survived long enough for the copyright to expire and the book to enter the public domain. A public domain book is one that was never subject to copyright or whose legal copyright term has expired. Whether a book is in the public domain may vary country to country. Public domain books are our gateways to the past, representing a wealth of history, culture and knowledge that's often difficult to discover.

Marks, notations and other marginalia present in the original volume will appear in this file - a reminder of this book's long journey from the publisher to a library and finally to you.

Usage guidelines

Google is proud to partner with libraries to digitize public domain materials and make them widely accessible. Public domain books belong to the public and we are merely their custodians. Nevertheless, this work is expensive, so in order to keep providing this resource, we have taken steps to prevent abuse by commercial parties, including placing technical restrictions on automated querying.

We also ask that you:

+ *Make non-commercial use of the files* We designed Google Book Search for use by individuals, and we request that you use these files for personal, non-commercial purposes.
+ *Refrain from automated querying* Do not send automated queries of any sort to Google's system: If you are conducting research on machine translation, optical character recognition or other areas where access to a large amount of text is helpful, please contact us. We encourage the use of public domain materials for these purposes and may be able to help.
+ *Maintain attribution* The Google "watermark" you see on each file is essential for informing people about this project and helping them find additional materials through Google Book Search. Please do not remove it.
+ *Keep it legal* Whatever your use, remember that you are responsible for ensuring that what you are doing is legal. Do not assume that just because we believe a book is in the public domain for users in the United States, that the work is also in the public domain for users in other countries. Whether a book is still in copyright varies from country to country, and we can't offer guidance on whether any specific use of any specific book is allowed. Please do not assume that a book's appearance in Google Book Search means it can be used in any manner anywhere in the world. Copyright infringement liability can be quite severe.

About Google Book Search

Google's mission is to organize the world's information and to make it universally accessible and useful. Google Book Search helps readers discover the world's books while helping authors and publishers reach new audiences. You can search through the full text of this book on the web at `http://books.google.com/`

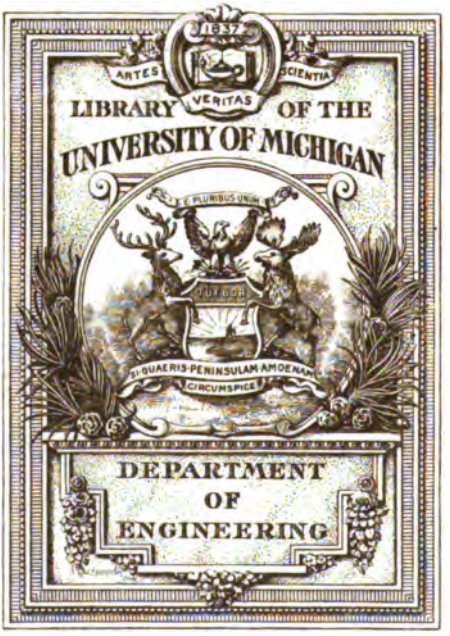
1837
ARTES
SCIENTIA
VERITAS
LIBRARY OF THE
UNIVERSITY OF MICHIGAN
E PLURIBUS UNUM
TUEBOR
SI QUAERIS PENINSULAM AMOENAM
CIRCUMSPICE
DEPARTMENT
OF
ENGINEERING

Engin. Library
TJ
547
.H97
1907

LIBRARY

VALVES AND VALVE-GEARING.

STANDARD ENGINEERING PUBLICATIONS.

LOCOMOTIVE ENGINEERING: A Practical Text-book for the Use of Engine Builders, Designers, and Draughtsmen. By WILLIAM F. PETTIGREW, M.Inst.C.E., and A. F. RAVENSHEAR, B.Sc. SECOND EDITION, Revised. With 280 Illustrations. Price 21s.

LOCOMOTIVE COMPOUNDING AND SUPERHEATING. By J. F. GAIRNS. In Large 8vo. Fully Illustrated. 8s. 6d. net.

LIGHT RAILWAYS, at Home and Abroad. By WILLIAM HENRY COLE, M.Inst.C.E. With Plates and Illustrations. 16s.

MARINE ENGINEERING: A Manual of. By A. E. SEATON, M.Inst.C.E., M.Inst.Mech.E., M.Inst.N.A. SIXTEENTH EDITION. With 250 Illustrations and 8 Plates. Price 21s. net.

THE THEORY OF THE STEAM TURBINE. By ALEXANDER JUDE. In Cloth. With 215 Illustrations. 15s. net.

LECTURES ON THE MARINE STEAM TURBINE. By PROF. J. H. BILES, LL.D., M.Inst.N.A. With 131 Illustrations. 6s. net.

LUBRICATION AND LUBRICANTS. By LEONARD ARCHBUTT, F.I.C., F.C.S., and R. MOUNTFORD DEELEY, M.I.M.E., F.G.S. SECOND EDITION. Large 8vo, Handsome Cloth. Illustrated. 21s. net.

HYDRAULIC POWER AND HYDRAULIC MACHINERY. By HENRY ROBINSON, M.Inst.C.E., F.G.S. THIRD EDITION, Thoroughly Revised and Enlarged. With 60 Plates and numerous Illustrations. Cloth. 34s.

THE PRINCIPLES AND CONSTRUCTION OF PUMPING MACHINERY (STEAM AND WATER PRESSURE). By HENRY DAVEY, M.I.C.E., M.I.M.E., F.G.S., &c. SECOND EDITION. 21s. net.

GAS, OIL, AND AIR ENGINES: A Practical Text-book on Internal Combustion Motors. By BRYAN DONKIN, M.Inst.C.E., M.Inst.M.E. FOURTH EDITION, Revised and Enlarged. Large 8vo. Cloth. 25s. net.

BOILERS, LAND AND MARINE: Their Construction and Strength. By T. W. TRAILL, M.Inst.C.E., F.R.R.N., late Engineer Surveyor-in-Chief to the Board of Trade. FOURTH EDITION, Revised and Enlarged. 12s. 6d.

ENGINE-ROOM PRACTICE: By JOHN G. LIVERSIDGE, R.N., A.M.I.C.E. FIFTH EDITION. Large Crown 8vo. With numerous Illustrations. 6s. net.

CALCULUS FOR ENGINEERS AND PHYSICISTS, APPLIED TO TECHNICAL PROBLEMS. By PROF. ROBERT A. SMITH and R. F. MUIRHEAD, M.A., B.Sc. In Crown 8vo, Extra, with Diagrams and Plate. 8s. 6d.

A TEXT-BOOK OF ENGINEERING DRAWING AND DESIGN. By SYDNEY H. WELLS, Wh.Sc., A.M.Inst.C.E., A.M.Inst.M.E. FIFTH EDITION. In Two Parts, Sold Separately. VOL. I.—PRACTICAL GEOMETRY, PLANE, AND SOLID. 4s. 6d. VOL. II.—MACHINE AND ENGINE DRAWING AND DESIGN. 4s. 6d.

THE THERMO-DYNAMIC PRINCIPLES OF ENGINE DESIGN. By L. M. HOBBS, Engr.-Lieut., R.N. In Crown 8vo. Cloth. 4s. 6d. net.

HINTS ON STEAM ENGINE DESIGN AND CONSTRUCTION. By CHARLES HURST. SECOND EDITION, Revised and Enlarged. In Paper Boards, 8vo. Illustrated. 1s. 6d. net.

Works by Prof. A. JAMIESON, M.I.C.E., M.I.E.E., F.R.S.E.

ADVANCED TEXT-BOOKS.

STEAM AND STEAM ENGINES, INCLUDING TURBINES AND BOILERS. FIFTEENTH EDITION. 10s. 6d.

APPLIED MECHANICS. In Two Vols. VOL. I., 8s. 6d. VOL. II., 12s. 6d.

INTRODUCTORY MANUALS.

STEAM AND THE STEAM ENGINE. For First Year Students. ELEVENTH EDITION. 3s. 6d.

APPLIED MECHANICS. SEVENTH EDITION. 3s. 6d.

LONDON: CHARLES GRIFFIN & CO., LTD., 12 EXETER STREET, STRAND, W.C.

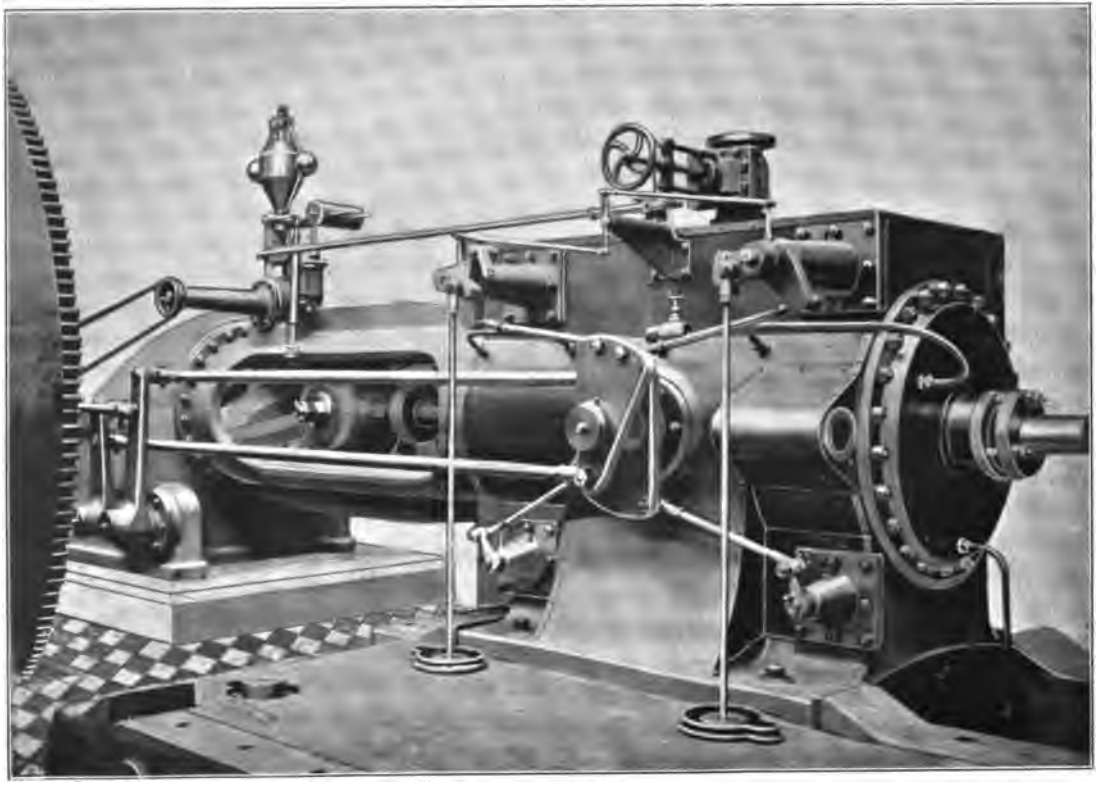

COMPOUND CORLISS PUMPING ENGINE. VALVE GEAR OF HIGH-PRESSURE CYLINDER.
(Starting Platform Removed.)

Designed by the Author.

VALVES

VALVE-GEARING

A Practical Treatise

For the Use of Engineers

[illegible]

[illegible]

FIFTH EDITION [illegible]

[illegible]

LONDON:
CHARLES GRIFFIN AND COMPANY, LIMITED
EXETER STREET STRAND.
[illegible]
[illegible]

VALVES

AND

VALVE-GEARING:

A PRACTICAL TEXT-BOOK
FOR THE USE OF ENGINEERS, DRAUGHTSMEN,
AND STUDENTS.

BY

CHARLES HURST,
AUTHOR OF "HINTS ON STEAM ENGINE DESIGN," ETC.

FIFTH EDITION, REVISED AND ENLARGED.

With Frontispiece, Numerous Illustrations and 10 Plates.

LONDON:
CHARLES GRIFFIN AND COMPANY, LIMITED;
EXETER STREET, STRAND.
1907.

[*All Rights Reserved.*]

PREFACE TO THE FIFTH EDITION.

In this Edition further revision and much additional matter are included; and many of the illustrations in former editions have been replaced by later designs.

The small figures of valves shown on the circumference of valve diagrams illustrate the position of the valves corresponding to various crank positions. It is hoped that they will make the diagrams more readily comprehensible to readers who have not given much previous study to the subject. In the case of slide valves, the end next to the diagram circle represents the front end of the valve—that is, the end nearest the crank-shaft. In four-valve engines, the valves nearest the crank-shaft are those drawn adjacent to the diagram, both in the case of steam and exhaust. The arrows denote the direction the valves are moving at the particular position shown: where no arrow appears the valve is in the extreme position of its movement, and has, therefore, no motion at that particular instant.

CHARLES HURST.

Lostock, *November, 1907.*

192143

CONTENTS.

PART I.

STEAM ENGINE VALVES.

Chapter I.—Simple Valve Gear.

	PAGE
Area of Ports,	1
Lead,	2
Point of Cut-off,	3
Diagram of Simple Valve,	3
Percentages of Release and Compression,	8
Application of the Diagram,	10
Divided Valves,	10
Valve Diagram,	11
Effect of Connecting-rod and Equalisation of Steam Distribution,	12
Ellipse Diagram,	14
Double-ported Valves,	16
Trick Valve,	17
Thom's Trick Valve,	18
Valve Diagram for Tandem Engines,	21
Valve Spindles,	21
Valve Pins,	24
Balanced Valves,	24
Piston Valve,	25

Chapter II.—Slide Expansion Gears.

Expansion Gears,	29
Diagram for Expansion Valves,	29
Application of Ellipse Diagram to Expansion Gears,	33
Valve Diagram,	34
Design of Expansion Valves,	35
Meyer Expansion Gear,	36
Rapid and Sluggish Cut-offs,	38
Application of the Diagram,	38
Expansion Regulator,	38
Meyer Gear with Inside Cutting Edges,	40
Double-ported Meyer Gear,	41
Reynold's Valve Diagram,	43
Reynold's Valve Diagram for Single Valve,	44
Reynold's Valve Diagram for Meyer Gear,	44
Classes of Automatic Expansion Gear,	45
Hartnell's Governor,	46
Diagram for Link Expansion Gear,	46
Application of the Diagram,	48
Ruston-Proctor's Expansion Gear,	52
Rider Gear,	52
Crank-shaft Governor Expansion Gear,	54
Westinghouse Governor,	56
Robinson's Shaft Governor,	57
Importance of Sufficient Range,	58

Chapter III.—Link Motions

Single Eccentric Reversing Gear,	59
Valve Diagram for Shifting Eccentric Gear,	61
Stephenson's Link Motion,	63
Open and Crossed Rods,	64
Valve Diagram for Stephenson's Link Motion,	64
Macfarlane Gray's Method of describing the Characteristic Line,	66

PAGE
Exact Diagram of Link Motion, 67
Crank-pin Diagram, . . . 70
Best Arrangement of Gear, . 71
Link Motion made by the North-Eastern Railway Co., . . 72
The Slot Link, ... 72
The Double Bar Link, with Eccentric-rods Inside, . . 72
The Double Bar Link, with Eccentric-rods Outside, . . 73
Proportions of Links,. . . 74
Gooch's Link Motion, . . 74
Eccentrics Driving obliquely, . 76
Valve Diagram for Gooch's Link Motion, ... 78
Crank-pin Diagram, . . . 78
Best Arrangement of Gear, . 79
Allan's Straight Link Motion, . 79
Diagram for Allan's Gear, . . 81
Expansion Gears and Link Motions Combined, ... 82

Chapter IV.—Other Reversing Gears.

Principle of Radial Gears, . . 83
Joy's Valve Gear, ... 83
Diagram for Setting out Joy's Valve Gear, ... 85
Joy's Gear on Marine Engine, . 88
Hackworth's Valve Gear, . . 88
Bremme's Valve Gear, . . 89
Diagram of Bremme's Valve Gear, ... 89
Practical Example of Bremme's Gear, ... 91
Comparison of Joy's and Bremme's Gear, . . . 91
Walchaërt's Gear, . . . 91

Chapter V.—Corliss Gears without Trip Motion.

Advantages of Corliss Gears, . 94
Classification of Corliss Gears, . 94
Valve Gear without Trip Motion, ... 95
Effect of Wrist Plate, . . 96
Reduction of Dwelling Angle, . 97
Location of Wrist-plate Pin, . 98
Rules for Diameter of Valves, . 98
Angle of Vibration, . . . 99
Position of Levers, ... 100
Valve Diagram for Corliss Gear, 102
Proportions of Steam Valve, . 104
Proportions of Exhaust Valve, . 106
Double-ported Valves, . . 106
Crank-shaft Governors applied to Corliss Valves, . . . 111
Diagrams of Valve Motion, . 112

Chapter VI.—Single Eccentric Corliss Gears with Trip Motions.

Principle of Trip Gears, . . 113
Advantages of Trip Gears, . 113
The Reynolds Trip Gear, . . 113
Diagram showing Range of Trip, 115
Diagram for Reynolds' Trip Gear, ... 117
Clearance of Catches,. . . 118
Movement of Trip Levers, . . 119
Cause of Popularity of Corliss Gear in America, . . . 120
Valve-rod Ends, . . . 120
Arrangement of Link-work, . 123

Chapter VII.—Double Eccentric Corliss Gears with Trip Motions.

Movement of Valves in Double-eccentric Gears, . . . 124
Diagram of Motion, . . . 124
Speed of Trip Gears, . . . 125
Range of Trip, ... 126
Proportions of Valves, . . 126
Musgrave's Trip Gear, . . 126
Musgrave's Latest Trip Gear, . 130

PAGE
Wood's Valve Gear, . . . 130
Inglis and Spencer Slip-rod, . 134
Arrangement of Inglis and Spencer Trip Gear, . . . 135
Pollit and Wigzell's Gear, . . 135
Dobson's Trip Gear, . . . 137
Valve Diagram for same, . . 140
Knock-off Gears and Vacuum Breakers, ... 140
Goodfellow's Gear, . . . 141
Governor and Trip Gear Design, 145
Dashpots, ... 146
Dashpot Springs, ... 148

Chapter VIII.—Single Eccentric Corliss Gears with Large Range of Trip.

Frickart Single Eccentric Gear, . 150
Valve Diagram for Frickart Gear, ... 152
Farcot Gear, ... 153
Features of Cylinder, . . . 155
Wheelock Gear, ... 155
Size of Tripping Catches, . . 155
General Remarks, ... 156

Chapter IX.—Drop Valves and Gears.

The Cornish or Double-beat Valve, ... 157
Marshall's Valve Gear, . . 167
Sulzer Gear, ... 169
Borsig Gear, ... 171
Tosi Trip Gear, ... 172
Kerchove Valve Gear, . . 174
Dashpot Springs, ... 174

Chapter X.—Miscellaneous Gears.

Beadle's Rotary Valve Gear, . 176
Duplex Pump Valve Gear, . . 178
Blake Valve Gear for Single-cylinder Direct-acting Pump, . 181
Steam Reverser Valve Gear, . 181

PART II.

GAS ENGINE VALVES AND GEARS.

Mushroom Valves, ... 183
Area of Valve Openings, . . 184
Size of Meter, ... 184
Beau de Rochas' Cycle, . . 185
Design of Cams, ... 187
Relative Position of Cams, . 191
Ignition Valve, ... 193
Actual Position of Cams, . . 194
Spiral Cams, ... 195
Eccentric Exhaust Gear, . . 195
Valve Diagram for Eccentric Gear, ... 196
Water-cooled Valves, . . 197
Variations in Cycles, . . . 197
Governing, ... 198
Modern Developments, . . 202
Water Injection, ... 202
Independent Compression, . . 203
Westinghouse Engine, . . 204
Tangye Engine, ... 205
Nuremberg Engine, . . . 206
Koerting Engine. . . . 206
Oechelhäuser Engine, . . . 208

PART III.

AIR COMPRESSOR VALVES AND GEARING.

	PAGE
Area through Valves,	209
Automatic and Positively-driven Valves,	210
India-Rubber Valves,	213
Hinge Valves,	213
The Coiled Valve,	215
Mushroom Valve,	217
Riedler Valve,	218
Ring Valve,	219
Ingersoll-Sergeant Compressor,	221
Slide Valves,	222
Corliss Valves,	223
Köster Valve Gear,	226
Unloading Devices,	231
Fraser & Chalmers' Air Governor,	232

PART IV.

PUMP VALVES.

General Remarks,	235
The Common Clack Valve,	235
Velocity of Water,	237
High Suction Lifts,	237
Lift of Valves,	238
Arrangement of Valves,	238
Spring-loaded Valves,	239
Double Beat Valve,	240
Multiple-ported Valve,	241
Shocks,	242
High-pressure Hydraulic Valves,	242
Flexible Valves,	245
Disposition of Valves,	247
Valve Grids,	248
Dermatine Valves,	249
Leather Valves,	250
Reflux Valves,	251
Haste Valve,	253

INDEX, ... 255

VALVES AND VALVE-GEARING.

PART I.—STEAM ENGINE VALVES.

CHAPTER I.—SIMPLE VALVE GEAR.

CONTENTS.—Area of Ports—Lead—Point of Cut-off—Diagram of Simple Valve—Percentages of Release and Compression—Application of the Diagram—Divided Valves—Valve Diagram—Effect of Connecting-rod Angularity and Equalisation of Steam Distribution—Ellipse Diagram—Double-Ported Valve—Trick Valve—Thom's Trick Valve—Valve Diagram for Tandem Engines—Valve Spindles—Valve Pins—Balanced Valves—Piston Valve.

IN dealing with valve gears, the common slide valve suggests itself as being a suitable starting point, for once the simple diagrams and requirements relating to it are understood, the subject leads easily and naturally to the consideration of more complex gears.

Area of Ports.—The first consideration when designing any valve gear is the amount of steam and exhaust openings requisite for the free passage of steam. According to present practice the velocity of steam entering the cylinder should not exceed 6,000 to 7,800 feet per minute; while that of the exhaust should not exceed 4,800 to 6,800 feet per minute.

Let A = area of port opening in square inches.
D = diameter of cylinder in inches.
P = piston speed in feet per minute.
V = mean velocity of steam in feet per minute.
V^1 = mean velocity of exhaust in feet per minute.

Then
$$A = \frac{D^2 \frac{\pi}{4} \times P}{V}.$$

The area of opening for exhaust will be $\frac{D^2 \frac{\pi}{4} \times P}{V^1}$.

In deciding upon the values of V and V^1, regard must be had to the length and shape of the ports, and to the intended pressure of steam. In long-stroke slide valve engines the lesser velocities should be taken; but in Corliss engines, where the ports are short and direct, the higher values of V and V^1 may be taken without fear of wiredrawing. The frictional loss of steam in the ports is proportional to its density; hence it is necessary to consider the pressure when calculating the area of passages. For instance, the

ports in the high-pressure cylinder of a well-designed compound engine may have such an area as will give a velocity of, say, 5,700 feet per minute to the steam and 5,200 to exhaust; but in the low-pressure cylinder it is not uncommon to find these velocities to be 7,200 and 6,500 respectively. These are *mean* velocities, and with engines taking steam up to half-stroke and later they are increased by fully 50 per cent. when the piston is passing half-stroke. Most high-class engines perform their normal duty with a much earlier cut-off than 50 per cent. in the high-pressure cylinder, and such engines may have the steam ports reduced in area so that the mean steam velocity up to the normal point of cut-off is not greater than above given, provided that the steam ports are not used for the exhaust function. When this reduction is made, however, the valve action should give an opening equal to the port area before the cut-off has taken place. This point will be more appreciated when designing valve gears having tripping arrangements. The smaller the steam ports the smaller will be the clearance volume, and the valves themselves will be less in proportion, as well as the power necessary to operate them.

It is easy to calculate the theoretical loss of pressure on the piston with steam having a certain velocity through the ports. The weight of steam at 150 lbs. absolute pressure is 0·3377 lb. per cubic foot. The static head necessary to give, say, 1 lb. pressure per square inch is—

$$\frac{1}{\frac{0{\cdot}3377}{144}} = 427 \text{ feet,}$$

and the theoretical velocity of flow is $8\sqrt{427} = 165$ feet per second. From this calculation it appears that steam velocities might be considerably increased above present practice with economical results, and the tendency is towards higher velocities. In an engine of the writer's design a mean steam velocity of 250 feet was given. This engine was designed with Corliss valves in the covers. The ports were straight and only about 1 inch long and the total clearance volume of the cylinder was 1·5 per cent. with a piston speed of 560 feet per minute.

Having determined the area of the ports, the length must be fixed upon to find the width; or, if the width be settled, the length is easily found. It is to be noted that the steam port should be equal in area to the amount given by the formula for exhaust—that is, in slide valve engines—as it is evident that the exhaust must pass through the steam port. Allowance should be made for any ribs which may be cast in the ports, as they contract the passages.

Lead.—In fixing the amount of lead, the chief point requiring attention is the piston speed. Other things being equal, the lead increases as the piston speed. Large clearance engines require more lead than Corliss engines. A common practice is to allow in medium-stroke engines $\frac{1}{32}$ inch linear lead for every 100 feet of

piston velocity. In vertical engines the lead on the top side of the cylinder is less than on the bottom, for two reasons. Firstly, because gravity is against the piston, piston-rod, crosshead, and connecting-rod on the up-stroke; and secondly, because most of the wear in the joints of the link is in a downward direction. It is a common practice, when first setting vertical engines to work, to give on the top side half the lead given on the bottom end.

Fig. 1.

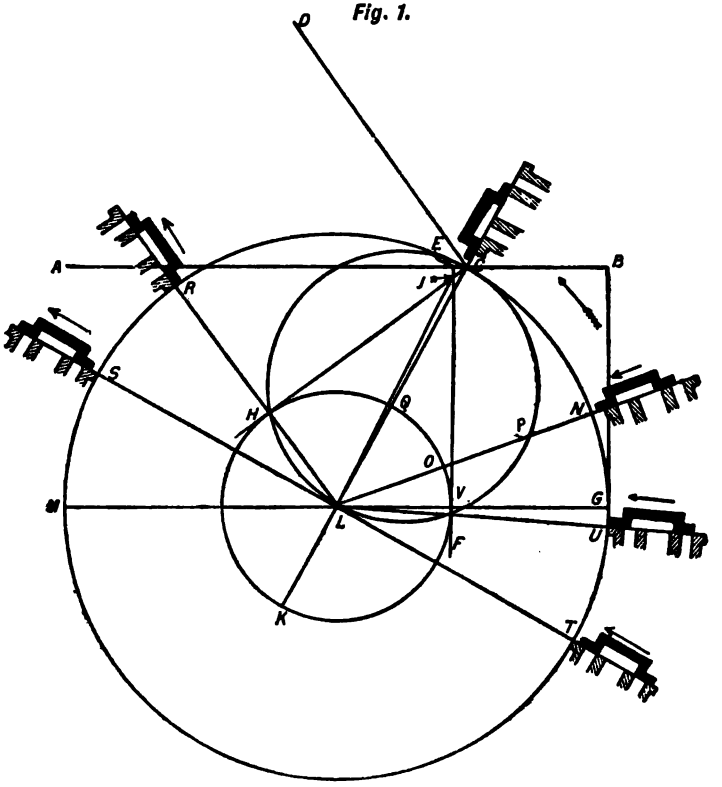

Point of Cut-off.—The percentage of cut-off with a common slide valve may be from $\frac{5}{8}$ to $\frac{7}{8}$ of the stroke. Greater expansion than the earlier cut-off given should be obtained by expansion valves; with a later cut-off than $\frac{7}{8}$ there is likely to be excessive back pressure. A cut-off at 75 per cent. is very convenient; the exhaust and compression then being quite satisfactory, and the travel of the valve not abnormal.

Having decided upon these points—namely, the port opening, the lead, and the percentage of cut-off—the design of the valve may be at once proceeded with.

Diagram of Simple Valve.—On a horizontal line A B (Fig. 1),

draw C D for the position of the crank when steam shall be cut off. From C, make C E equal to the lead, and draw E F perpendicular to A B. Draw B G parallel to E F, making E B equal to the required width of steam opening. Next, draw C H at right angles to C D, cutting the line E F at J. Bisect H J F by line J K. On J K find the centre of a circle which shall pass through C and touch the line B G. Let L be the centre thus found. Then, in the diagram, L C or L G equals the throw of the eccentric, or half the travel of the valve; L H is the amount of outside lap, and L C is the position of the eccentric sheave relative to the position L M of the crank, L M being parallel to A B. On L C describe the primary valve circle C H L. This circle cuts the lap circle H K in H. Draw the line L H R. This is the position of the crank when cut-off occurs. The line L R should be parallel to C D; and the fulfilment of this condition is a test for the accuracy of the diagram.

That this construction is correct is proved by the following reasoning:—The line H C is drawn at right angles to D C; and in the semicircle L H C, the angle C H L is a right angle (Euclid's Elements, Bk. iii., Prop. 31); L R is therefore at right angles to H C, and, consequently, parallel to D C.

Again, because the circle H K O is drawn so that the line H C is tangent, the line L R is at right angles to that tangent (Euclid, Bk. iii., Prop. 18), and therefore parallel to the given line of cut-off D C.

That the maximum port opening is equal to the given amount E B can readily be shown. The line E F is drawn at right angles to A B, and so is line B G. Therefore, E F and B G are parallel. The line E F is also tangent to the circle K H O, by construction; and, therefore, since the half travel of a slide valve is occupied by lap and port opening, the distance L G is equal to the port opening *plus* the lap. But it has been shown that V G is equal to the port opening; therefore L V is the lap.

The whole principle of the Zeuner diagram is directly founded on the 31st proposition of Euclid's third book; and the truth of all diagrams can be proved by reasoning similar to that given above.

Taking any position of the crank, as at L N, the condition of things is clearly shown by the diagram. The port will be open to steam an amount equal to O P, given by the distance between the lap circle and the valve circle on the line of the then position of the crank. Also, at this position, the valve is distant to the left of its central position an amount equal to L P. At crank position L O the valve is at its greatest distance to the left of its central position, the port opening being equal to Q C; Q C being equal to E B as arranged for. Again, at L R the valve has just closed the port; L H being its displacement to the left of its mid position. At L S the valve has arrived at its central position and travels to the right until L K is reached. It now returns and arrives at its central position at L T; the line S T being at right angles to L C. At L U the port is open ready for the commencement of the stroke.

Thus far only the action of the entering steam has been considered. In order to study the exhaust, Fig. 2 is constructed. In actual working this diagram would not be drawn separately, but it is to facilitate explanation and avoid confusion that two diagrams have been drawn in this instance.

Make L C, L H, and angle C L U, respectively, equal to L C, L H, and angle C L U in the first diagram. Produce C L to V, and on L V describe the secondary valve circle. Now, as the primary valve circle gave the port openings to steam for any crank position

Fig. 2.

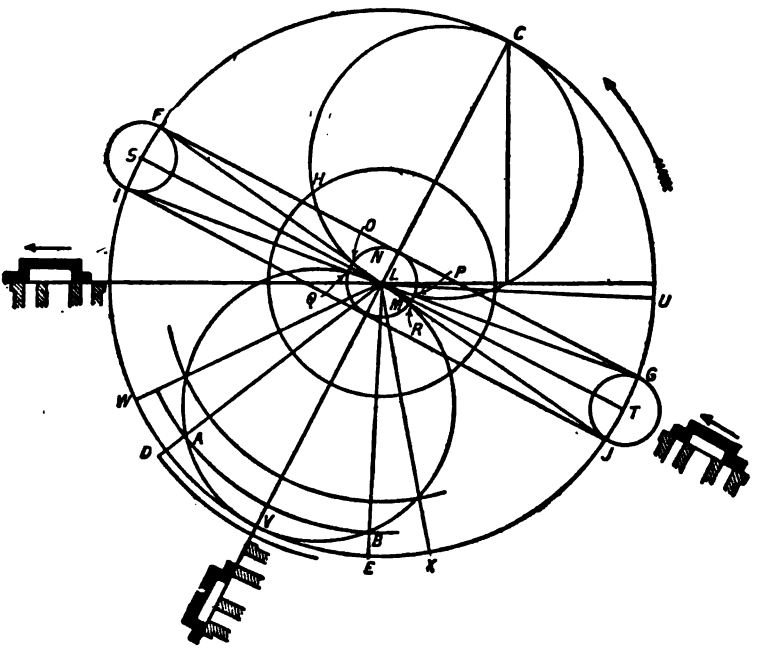

from T to S, so will the secondary valve circle give the port openings and valve positions for any point of the stroke from S to T, in the direction of the arrow.

Taking a case in which there is no inside lap, at crank position L S, the valve is in its central position, as previously explained; and it is evident that when it is in this position the valve is about to open for exhaust either one port or the other. L S, therefore, represents the position of the crank when release occurs. The port is being opened from S to V. Of course, the opening cannot exceed the width of the steam port, so that, if from L as centre, an

arc A B be struck, the radius of which is equal to the width of the steam port, it is clear that the maximum port opening is attained at crank position L D, and this opening is maintained till L E is reached. At this point reduction commences and continues till L T. At L T the port is closed, and the steam remaining in the ports and cylinder is compressed until admission occurs at L U.

Considering now the effect of inside lap, it will be observed that positive inside lap delays release and hastens compression; while

Fig 3.

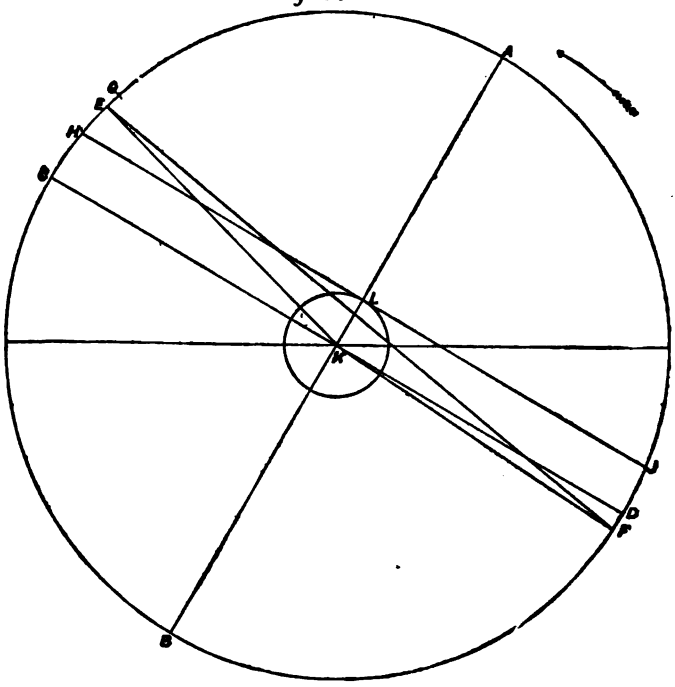

negative lap has the reverse effect in an equal degree. From L as centre, and with radius equal to the inside lap, either negative or positive, describe the circle M N. This circle cuts the primary valve circle at the points O and P, and the secondary circle at Q and R. From L draw lines passing through these points, and produce them to the circle C D E. Then with positive lap, L I is the position of the crank at release, and L J its position at compression. With negative lap, L F is the release position, and L G compression

position. The same result may be obtained by a different method. On S and T as centres, and with radius equal to L N (the inside lap), describe the circles I F and G J. These circles cut the valve travel circle at points F G I and J, and these are the required points. In practice, however, it would usually happen that the points of release and compression would be decided upon. Then it would be necessary to obtain the inside lap to effect the desired result. Let F and G be the points decided upon. Join F and G by the straight line F N G. Then, if this line be parallel to S T, L N is the

Fig 4.

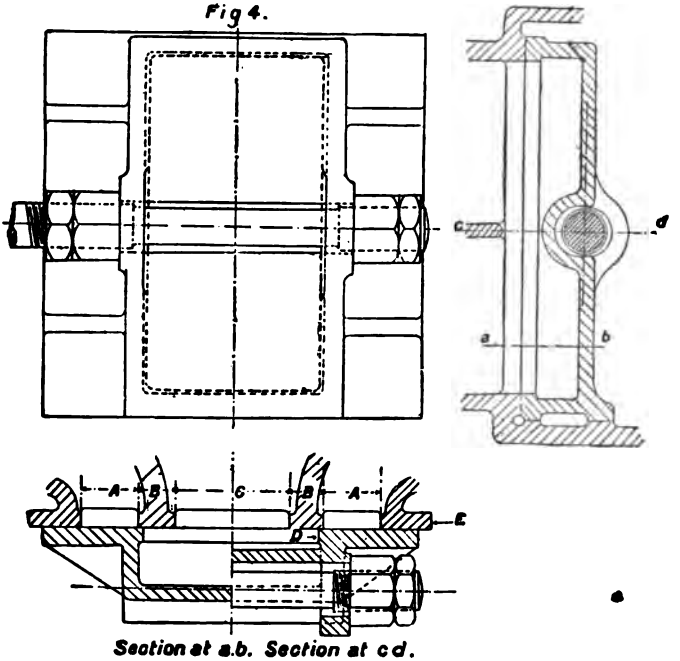

Section at a.b. Section at c d.

required negative inside lap; the circle M N having F N G as a tangent. If I and J were the points chosen, L M would be the necessary positive inside lap, the line I J being parallel to S T.

This construction only applies to cases where the line joining the two chosen points is at right angles to the centre line of the valve circles; and when this is not the case it is to be concluded that no amount of lap, neither negative nor positive, will effect the required distribution; but it is easy to arrange matters so that the resulting distribution shall be a compromise between the two points. In

Fig. 3, A B represents the centre line of the valve circles, and C D is at right angles to A B. E and F are the chosen points for release and compression. But the line E F is not parallel to C D; therefore this distribution is not possible. From E make E G equal to F D. Bisect the arc C G in H, and draw H J parallel to C D. If the lap be made equal to K L, release and compression will be at H and J respectively; and these points will be the nearest approach to the required distribution that it is possible to attain. When the line joining the two given crank positions intersects the primary valve circle the lap will be negative; and when that line intersects the secondary valve circle the lap will be positive; and when the line is at right angles to the centre line of the valve circles there will be no inside lap whatever.

In Fig. 2, if there be negative lap equal to L N, the port will be fully open to exhaust at crank position L W; the arc whose radius equals the width of the steam port minus negative lap, being struck from L as centre. L X is the point at which reduction commences. With the same amount of positive lap, it is evident that the port will never be fully open to exhaust, as shown by the arc falling without the valve travel circle.

Percentages of Release and Compression.—In determining the most suitable point for compression, the clearance is the chief point to consider. The most satisfactory way is to plot down the probable indicator diagram, and by means of the hyperbolic curve, to find a compression that will give a final pressure in the cylinder to balance the momentum of the moving parts. Having settled on this point, the valve diagram is drawn, and the release point finds itself. It is possible that release may fall before cut-off, in which case less compression must suffice in order to cause release to fall later in the stroke. Release at 92 per cent., and compression at 89 per cent., have been found very satisfactory for horizontal engines, with piston speeds of from 450 to 600 feet per minute, and with clearance volumes of from 5 to 10 per cent. of the piston's displacement.

Another matter which, in high-speed engines especially, will influence the compression is the unequal inertia effects on the forward and backward strokes, due to connecting-rod influence. It is well known that the reciprocating parts attain their maximum speed earlier in the forward than in the backward stroke; this means that the parts are hurled on the crank pin with greater force on the backward stroke, and, therefore, more compression is required on the back end. Sometimes a noisy engine may be considerably improved by a little adjustment in this direction.

In high-speed vertical engines, it is the practice to give more compression on the under side of the piston, in order to counteract gravity. A compression at 82 per cent. on the bottom side is not uncommon in such cases.

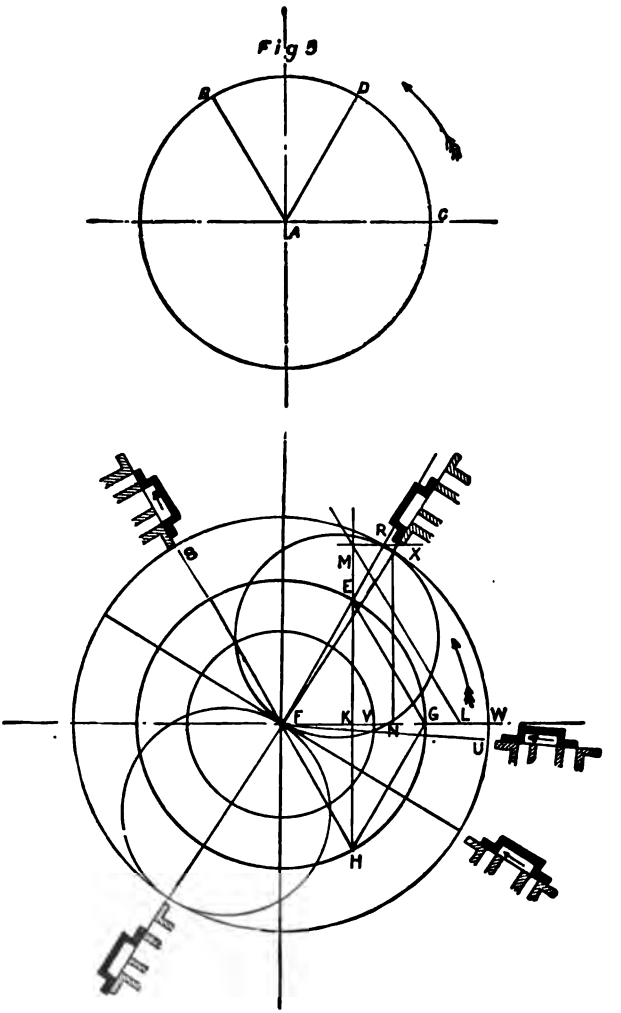
Fig 5
B
D
C
A
R
X
M
E
B
F
K
V
N
G
L
W
U
H

Application of the Diagram.—The practical application of the valve diagram is illustrated by Fig. 4. A is the width of the steam port as obtained by calculation. B may be any convenient dimension. Then C should equal distance L C (*i.e.*, half travel of valve, see Figs. 1 and 2) + A − B (Fig. 4) ± L; L being *plus* for positive inside lap, and *minus* for negative inside lap. When the port and valve faces are thus designed, the port opening through C will never be less than the width of the steam port; that is, assuming that the width of the bar, B, is less than L C − L when there is positive lap; and L C + L when there is negative lap. The edge of the valve, D, must on no account slide past the outer edge of the port face, E.

The following is a very useful extension of the Zeuner diagram for solving the foregoing problem :—

Let A B in the upper diagram of Fig. 5 represent the position of the crank when it is desired to cut off. Bisect the angle B A C by the line A D. In the lower diagram, draw the circle E H equal to the assumed circle B D C above. Make angles G F E and G F H both equal to angle D A B or D A C; and join E and H by the line crossing the horizontal at K. From K, lay off K L equal to the required maximum port opening *minus* half the lead the valve is to have. Join G E, and draw L M parallel to G E, cutting H E produced, in M. From M draw the horizontal M R, intersecting F E produced, in R. Then F R is the half travel of the valve. Draw the circle R S W. From W, lay off the maximum port opening W V, which discovers the lap F V. Draw the lap circle; and make V N equal the given lead. Draw the perpendicular N X. Then F X is the eccentric position when the crank is on dead centre; and drawing the valve circle having F X as a diameter, will show the steam action. In the figure, admission is seen to be at F U, and cut-off at F S, and F S is parallel to A B above.

Divided Valves.—When the stroke of an engine is very long in proportion to the diameter of the cylinder, the clearance with a

Fig 6.

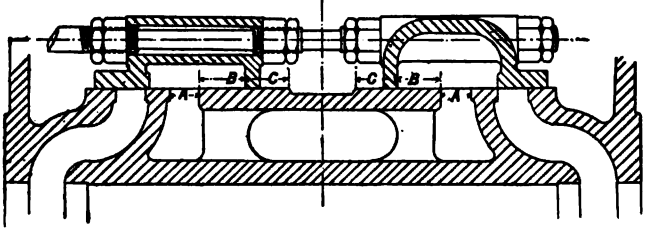

slide valve is great. This clearance, however, may be considerably reduced by placing a valve at each end of the cylinder. Fig. 6 shows such an arrangement. The section of the front valve is taken

through the boss for spindle; whilst the back is shown by a section above the spindle, and shows the dish-shaped form of the valve.

The proportions of the port and valve faces are here given.

A = width of steam port.
B = half travel of valve.
C = half travel of valve + ½ inch to 1 inch.

A case may frequently arise in which the travel of the valve, lap, and lead are known, and it is required to find the points of cut-off, release, and compression. This problem presents itself when the actions of existing valves are being considered, so that alterations can be made should the steam distribution be found unsatisfactory.

Valve Diagram.—On A B (Fig. 7) draw the circle A B C D, equal in diameter to the given travel of the valve. From centre

Fig. 7.

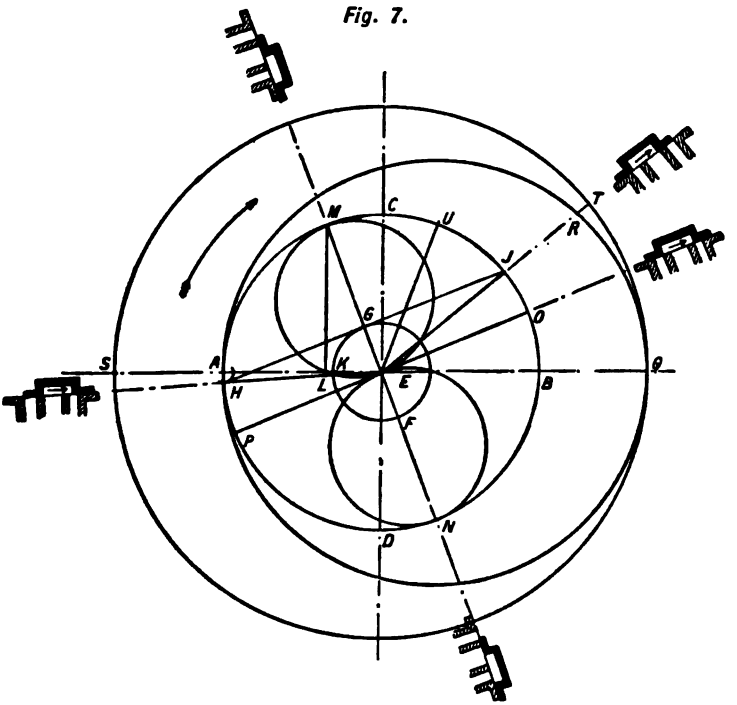

E, and with radius equal to the given outside lap, describe the circle F G. From centre A, and with radius equal to the given lead, describe the circle. The line H J drawn as a tangent to the lap and lead circles cuts the circle A B C D in H and J. E H is the position of the crank when admission takes place, and E J is the crank position at cut-off. From K, set off K L equal to the lead,

and erect a perpendicular L M. Join E and M. Then E M is the position of the eccentric sheave relative to the position of the crank E B. Produce M E to N, and on line M N describe the primary and secondary valve circles. The completion of the diagram is now a simple matter, and it will suffice to say that E O is release point, and E P compression point, the valve having no inside lap. The arrow indicates the direction of rotation, or rather the direction in which the steam distribution is traced; and although the eccentric is spoken of as being at E M, it should be remembered that this is its position relative to the real position of the crank E B, as said. To show the eccentric relative to the crank when at A E, the line E U is drawn; angle C E U being equal to angle C E M.

In all cases connected with the ordinary slide valve, it is well to remember that the crank being on dead centre, the centre of the eccentric sheave is in advance of the crank by 90 degrees *plus* the angle necessary for lap and lead; and further, if the valve had neither lap nor lead, the eccentric sheave would be at right angles to the crank and leading.

If the distance A B be taken to represent the length of the connecting-rod, and to the same scale B Q be made equal to the length of the crank, the distance of the piston from the beginning of the stroke for any crank position is given by the distance between the valve travel circle A B C, and the circle Q R A, on the line indicating that position. Thus, at crank position E J, J R is the distance of the piston from the beginning of the stroke. Similarly, the circle Q T S gives the distance of the piston from the end of the stroke for any crank position. At crank position E J, R T is the distance of the piston from the end of the stroke. J R + R T = B Q, wherever J R and R T may be.

Effect of Connecting-Rod and Equalisation of Steam Distribution.—In all previous diagrams the angularity of the connecting-rod has been neglected; but in most cases it is necessary to take this angularity into account. The Zeuner diagram admits of this, but not of that of the eccentric-rod; the ratio of the length of the eccentric-rod to its travel, however, being in most cases great may be neglected. The effect of connecting-rod angularity is to cause events in the forward stroke to occur later than the corresponding events in the back stroke. Thus, a connecting-rod of five cranks in length would cause a cut-off at 75 per cent. in the forward stroke to occur at 68·75 per cent. in the back stroke; and with a shorter rod the difference would be greater. It is possible to equalise these events. It is also possible to equalise release and compression; and Fig. 8 shows how this may be done. Let C A be the crank position at release for the forward stroke. It is required to cause release in the back stroke to occur at the same fraction as in the front stroke. Produce the line F G, and with a centre somewhere on this line describe the arc A D, the radius of which bears the same ratio to distance A C, as the connecting-rod bears to the crank. F G representing the stroke of the engine, it is evident that the piston has travelled a distance G D from the

beginning of the stroke when release occurs; and A C is the corresponding crank position for this point. From G, make G E equal to F D. With centre on F G produced draw the arc E H. Produce C A to B. The distance B H will represent the difference between the inside lap of the front end of the valve and the inside lap of the back end. For example, suppose that in order to release at A C in the front stroke no inside lap were required; then the back end of the valve would have no lap, for it is the back end of the valve which controls the forward stroke. But if release is to occur at C H in the backward stroke, the front end of the valve must have positive inside lap equal to B H, because the front end controls the backward stroke.

Fig 8

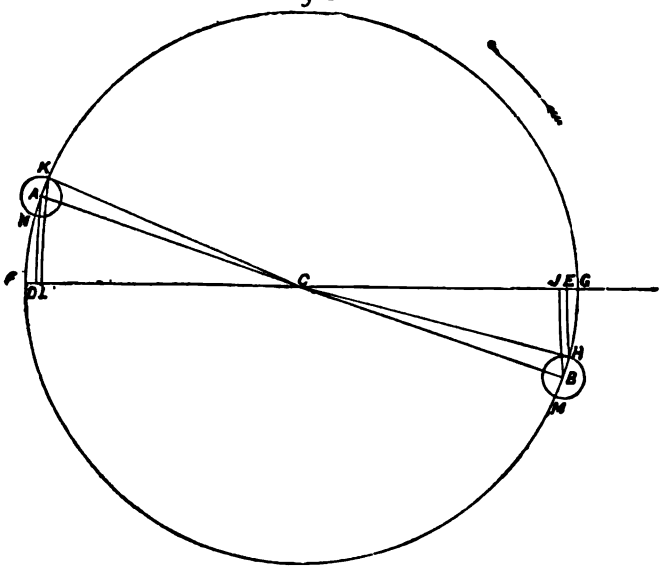

Dealing now with compression, it will be observed that if C B represent the crank position when this event takes place, the piston will be distance G J from the end of the backward stroke; F G representing, as before, the whole stroke. From F, make F L equal to G J, and draw the arc L K. Produce C B to A. Then A K will be the difference between the inside laps of the valve in order to equalise compression. In the present instance B H = A K; therefore both compression and release are equalised.

It has been mentioned that cut-off may be equalised. Fig. 9 shows how this may be effected:—C B is the position of the crank at cut-off, in the forward stroke. A C is the centre line of the eccentric. Produce A C to D; and on A D describe the valve circles. C F is the lap circle for the back end of the valve. With

the length of the connecting-rod as radius, draw the arc B G. Make J K equal to E G, and draw the arc H J. Join C and H. Where C H crosses the secondary valve circle (this circle being really the primary circle for the back stroke) describe the circle L O, the radius of which will be the necessary outside lap for the front end of the valve. Equalisation of cut-off has been obtained at the expense of unequal port openings (F A being the amount for the back port, and O D the amount for front port) and unequal leads. This is a serious objection; hence, equalisation of cut-off with the common slide valve is never attempted in practice.

Fig. 9.

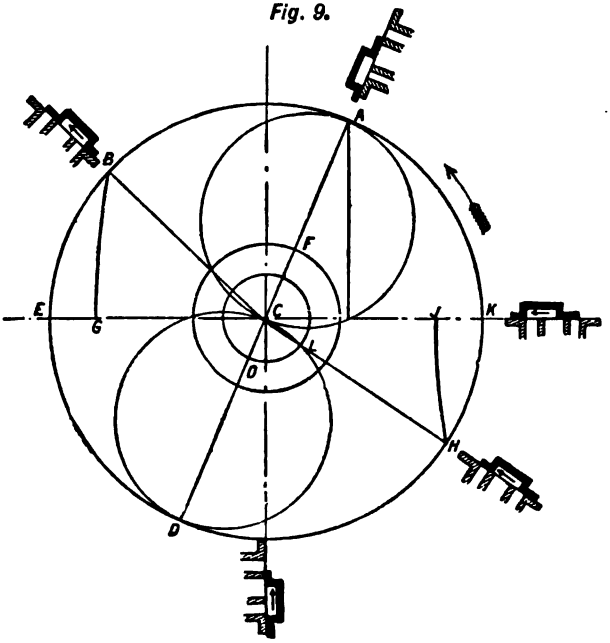

Ellipse Diagram.—A convenient way of studying the action of the slide valve is to plot the motion of the piston as abscissa, and that of the valve as ordinate. On a horizontal line (Fig. 10) draw the path of the crank pin to any convenient scale, and divide it into any number of equal parts. On the horizontal line, and to any convenient scale, draw the eccentric circle. Make the angle G C a' equal to the angular advance of the eccentric. From a' divide the circle into equal parts to correspond with the crank-pin circle. Draw the arcs for the connecting-rod and the eccentric-rod, the centre line of the eccentric-rod, A B, being at right angles to the centre line of the crank-pin circle, A G. Starting at point a on the crank-pin circle, erect a perpendicular a 1. a' is the corresponding eccentric position, and D will be the valve position. Project D 1

horizontally, meeting the vertical *a* 1 at 1. The first point in the curve has now been obtained. Repeat the process for each position, and draw a fair curve through all the points thus found. This curve is called the valve ellipse. Draw E F parallel to *a* G, and

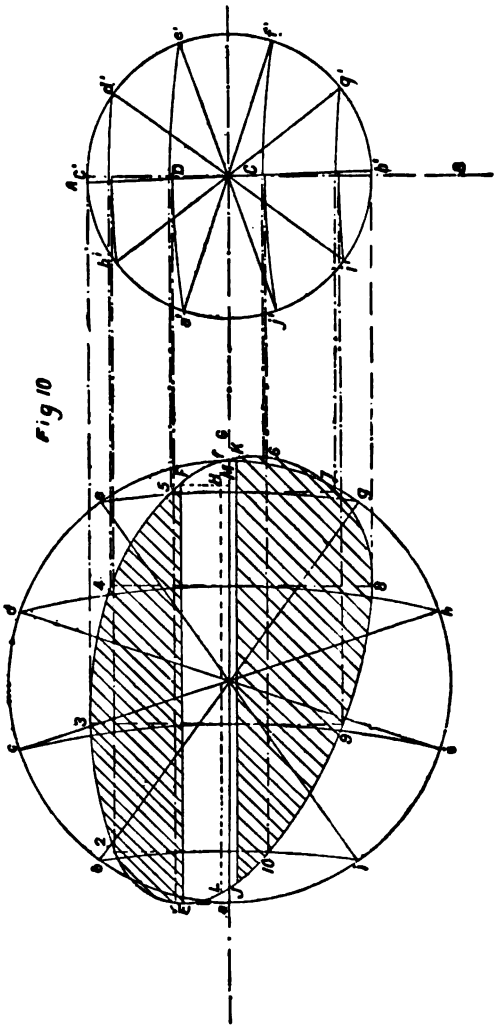

Fig 10

remote a distance equal to the outside lap. This line cuts the valve ellipse at points E and F. E is the point at which admission occurs; and F is the point of cut-off. Projecting these points to the line *a* G, which represents the stroke of the piston, their per-

centages may be easily obtained. When the piston is at *a*—that is, the beginning of the stroke—the valve will be distant, *a* E, from its mid position. Again, at piston position, H—the projection of F—H F is the displacement of the valve from its central position, and the port is just closed to steam. If J K be parallel to *a* G, and remote a distance equal to the positive inside lap, K and J will be the points of release and compression respectively. For negative inside lap, L M would be drawn above *a* G; and L and M would be the points of compression and release respectively. The upper shaded portion of the figure will give the port openings to steam for any crank position; whilst the lower shaded portion illustrates the opening to exhaust.

It is evident that this diagram is not suitable when designing new valves, but for tracing the action of existing gear, where the travel of the valve and the angle of advance are known, it is very convenient, inasmuch as it permits of both connecting-rod and eccentric-rod being taken into account. This is the only advantage over Zeuner's diagram.

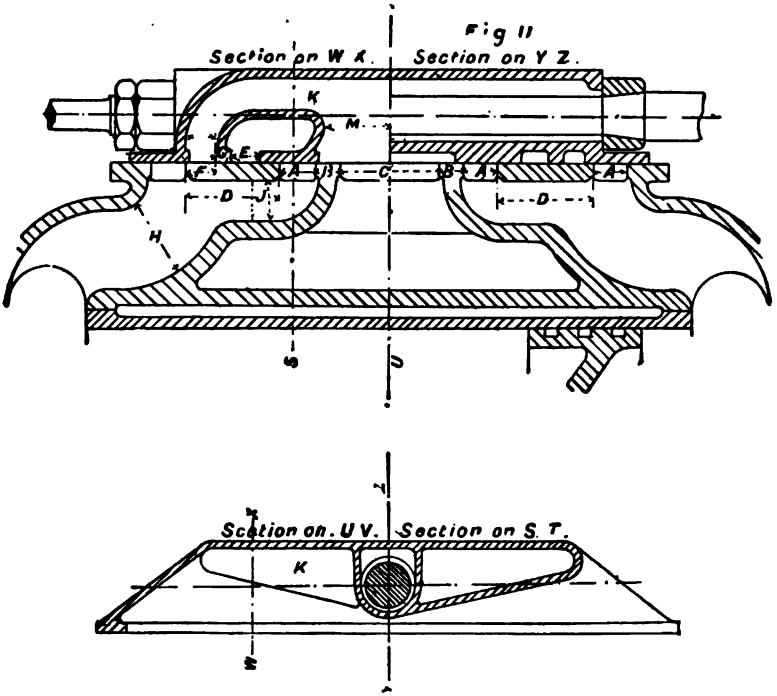

Double-Ported Valve.

Double-Ported Valves.—Cylinders of large size require ports of considerable width; and consequently, the necessary travel of

the valve becomes excessive. Other things being equal, the work required to actuate the valve varies directly as the travel; hence it is desirable to make the travel as small as possible. The double-ported valve gives twice the steam opening of an ordinary valve with the same travel, and is much used for large cylinders. The valve diagram is drawn exactly as for an ordinary valve. The port openings and lead, however, will be twice the amount shown by the diagram. An example of a double-ported valve is given in Fig. 11. The correct proportions of the port and valve faces are here given :—

A = half total width of required exhaust opening.
C = 2 A + half travel of valve ± inside lap (+ L for positive lap, – for neg.) – B.
E = half total width of required steam opening.
F = half travel of valve.
D = E + G + F + outside lap.
J = A.
H = 2 A.

Area of passage K = area of one steam port.
M = not less than A; preferably more.
B and G, of course, are empirical.

The figure shows a valve suitable for a vertical engine. The spindle is prolonged to carry a balance piston at the top of the steam chest. The chipping strips at the entrance of the valve ports not only facilitate the finishing up to the exact sizes, but give an increased area for steam through the valve. This is an advantage; for it is evident that the boss round the valve spindle reduces the area of these passages. The chipping pieces compensate for this reduction.

Trick Valve.—Fig. 12 shows a form of slide known as the trick valve; a design which gives a better steam opening than an ordinary valve. An inspection of the figure will render its action apparent. E is a passage in the valve which will admit steam from the left-hand side of the valve to the right-hand port, or from the right-hand side of the valve to the left-hand port, when the edge of the valve T slides past the end of the port face. The port and valve faces are so disposed that at the instant this occurs, the port will also be opened by the edge F, thus admitting steam as an ordinary slide valve. The proportions of this valve are as follows :—

B = half required width of port opening.
A = 2 B + C, if sufficient for exhaust.
L is the outside lap, as obtained from valve diagram.
D = L.
M = half travel of valve.
Area of passage E = half area of port opening.

It is important that the edges H do not open the port before the edges G have closed; otherwise, the steam in passage E will be lost at each stroke. When the above proportions do not admit of this, B may be reduced the required amount, the reduction being

compensated by an increased opening past the edge F; which means a little extra travel. If the point of cut-off is to be maintained, the increased travel will alter the lap; and it is probable that the ports will have to be re-arranged to suit the altered circumstances.

The valve diagram calls for no comment, except that the true port opening is not the amount shown by the figure. The lead is

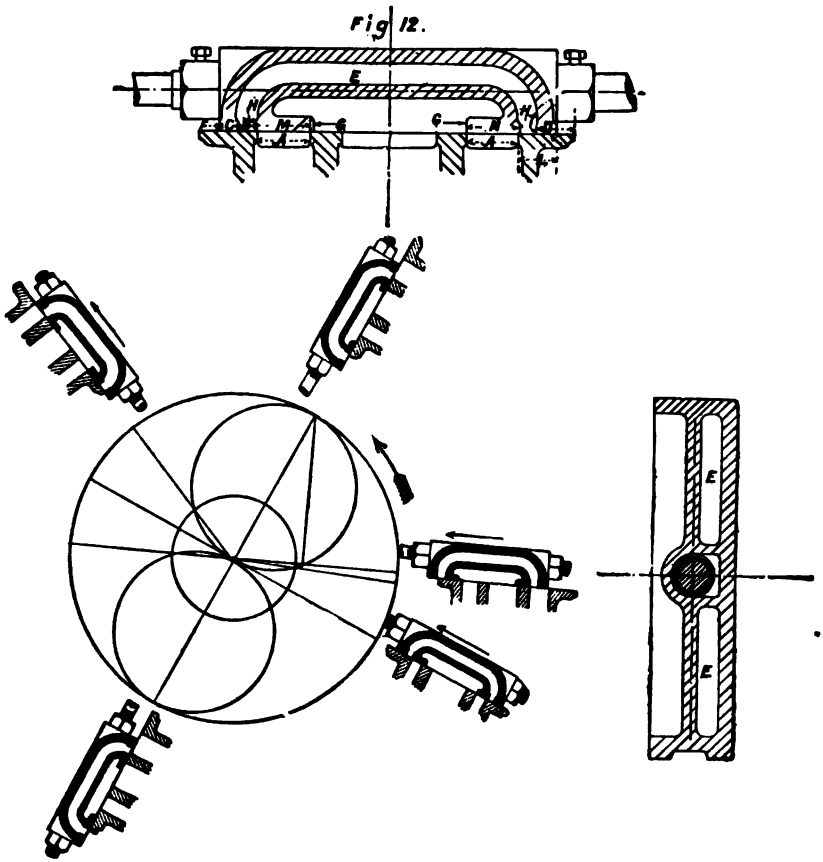

Trick Valve.

twice the amount shown. An equalisation of release and compression has been obtained by inside lap on the front end of the valve. The trick valve should have chipping strips at the edge of the ports in order to compensate for the reduction of area due to the boss of the valve spindle.

Thom's Trick Valve.—Thom's patent trick valve is an ingenious and useful invention, and has been successfully applied to many

low-pressure cylinders of marine engines. In Fig. 13, the valve is shown in its central position, and the corresponding position of the

Fig 13.

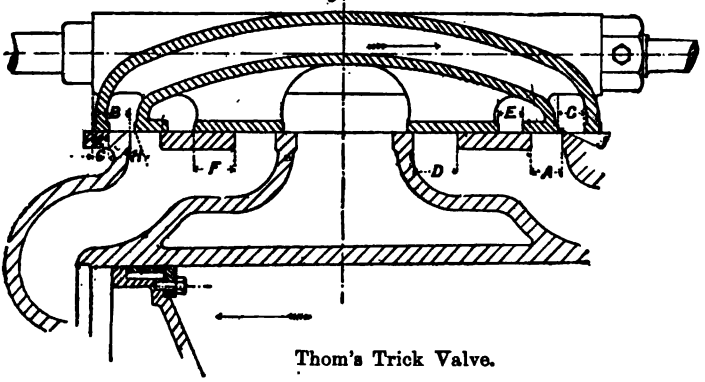

Thom's Trick Valve.

piston is also indicated. Under these conditions, steam is entering from the top, through the patent passage, to the bottom side of the piston. A slight movement of the valve in the upward direction will destroy this connection; and the piston, continuing its down stroke, will compress the steam remaining in the cylinder and port at the bottom end. When it is remembered that the terminal pressure of most condensing engines is very low, the difficulty of obtaining satisfactory compression will be appreciated, and the advantage of this valve is, that it substitutes steam of a pressure equal to that at release point, in place of a vacuum that approximates to that of the condenser. A proper compression is thus obtained, the ports are hotter at the commencement of the next stroke than they would otherwise be, and hence there is less condensation; and a saving of steam at release point pressure, and in volume equal to the capacity of the ports and clearance, will be effected at each revolution.

The proportions of this valve may be as follows:—

B = lap as obtained from diagram.
C = half required width of port opening (steam).
A = 2C + G.
K = B.
D + E = necessary width for exhaust.
F = half travel of valve + say ½ inch for tightness.

It will suffice if the communication between the ends of the cylinder occur when the valve has moved in a position in which the exhaust has closed by about ⅜ of an inch. The accompanying diagram will illustrate the action. Let C D represent the travel of the valve and also the stroke of the piston. Let H E be the position of the crank when compression commences, the direction of rotation being that indicated. The corresponding position of the piston is A. Make E F equal to the desired cover of the valve

before communication takes place. H F is the crank position, and

Fig 14.

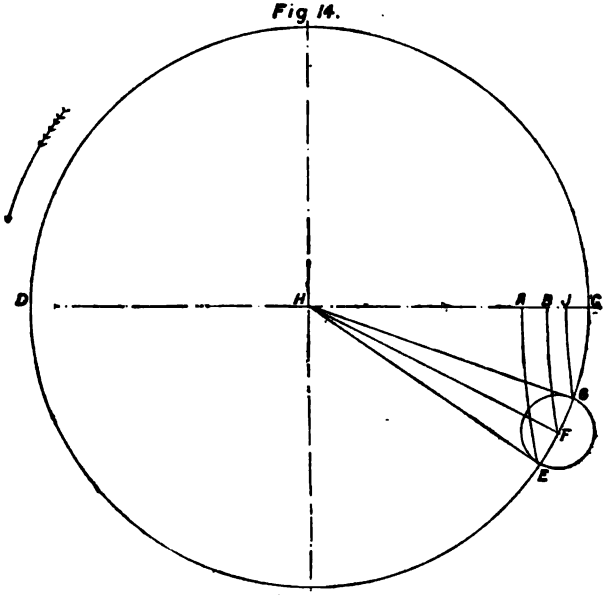

Fig 15.

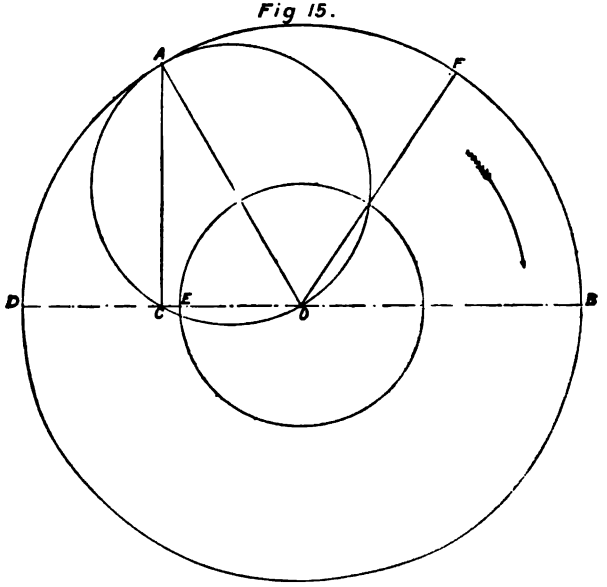

B the piston position when communication takes place. Let F G

equal H (Fig. 13), the distance between the edge of the valve J and the edge of the port. Then communication will exist while the crank is travelling from F to G, and the piston from B to J.

Valve Diagram for Tandem Engines.—In tandem engines, where the valve of the back cylinder is worked by a prolongation of the valve spindle of the front cylinder, it is evident that the travels and the advance angles of the two valves will be the same. Suppose the front valve already designed. Having decided upon the lead of the back valve, all necessary data are to hand for the construction of a diagram. From O as centre, draw the valve travel circle A B D. Draw O A, the given position of the eccentric in relation to the real position of the crank O B. Draw A C perpendicular to B D; and from *c*, mark off C E, equal to the lead. E O will be the lap. Draw the lap circle. Describe also the valve circle, giving by its intersection with the lap circle, the position of the crank at cut-off O F. E D is the maximum width of steam port opening; the area of which being known, the length is obtained. Should this be found inconveniently long, a trick valve, or a double ported valve, would perhaps set matters right in this respect; or the front valve ports might be altered so as to overcome the difficulty. O F also may be found unsuitable; in which case, a compromise between the two cylinders may be effected, in order that this objection may be removed, or at least mitigated.

Valve Spindles.—The determination of the size of valve spindles requires careful consideration, in order that they may perform their work without trembling or buckling.

Let μ = coefficient of friction between valve and port faces. (Take 0·2, which allows for weight of valve and friction of stuffing boxes.)
P = pressure of steam in valve chest, in lbs. per sq. inch.
S = working stress on valve spindle at smallest diameter. (5000 to 6000 lbs. per sq. inch for steel; 4000 to 5000 for iron.)
A = full area of back of valve in sq. inches.

Then area of spindle at smallest diameter = $\frac{\mu P A}{S}$; which rule agrees closely with practice. But this rule must not be applied in every case; for other considerations may modify the dimension thus found. In cases where the distance from the valve to the spindle guide is considerable, and where the eccentrics are not in line with the valve spindle, which would cause a bending action on the latter, it would be advisable to exceed the dimension found by formula. This rule does not indicate the actual force required to move the valve, which is generally much less than the amount expressed by the formula; but it gives a result sufficient to cover such occurrences as temporary failure of lubrication and undue tightness of glands.

The following table, collated from actual practice, will serve to show the effect of various conditions that influence the dimensions of valve spindles:—

Description of Engine.	Boiler Pressure.	Extreme Dimensions of Valve in inches.	Distance from centre of Valve to centre of Guide in ins.	Diameter of Valve Spindle at Stuffing Box in inches.	Remarks.
Vertical triple expansion condensing, 8-in. high-press. cylinder,	160	$7\frac{1}{4} \times 7\frac{1}{8}$	...	$1\frac{3}{8}$	Simple slide valve. Steel spindle. No guide for spindle other than stuffing box. From centre of valve to centre of eye in valve spindle 2′ 4½″.
13-in. intermediate cylinder for above engine,	...	$7\frac{1}{8} \times 10\frac{1}{2}$	...	$1\frac{3}{8}$	Same remarks apply. Maximum pressure in valve chest 75 lbs.
22-in. low-press. cylinder for above engine,	...	8×18	...	$1\frac{3}{8}$	Same remarks apply. Maximum pressure in valve chest 16 lbs.
$17\frac{1}{2}$-in. locomotive,	140	11×14	48	$1\frac{7}{8}$	Simple slide valve. Yorkshire iron case-hardened spindle.
Horizontal twin compound condensing, 25-in. high-press. cylinder,	100	20×22 main valve, $7\frac{1}{2} \times 21$ cut-off valves,	96	$2\frac{1}{2}$ main, $2\frac{1}{8}$ cut-off,	Meyer expansion gear. Steel spindles.
44-in low-press. cylinder for above engine,	...	40×42 main valve, 10×42 cut-off valves,	96	$2\frac{1}{2}$ main, $2\frac{1}{8}$ cut-off,	Double-ported Meyer expansion gear. Steel spindles. Maximum pressure in valve chest 32 lbs.
60-in. low-press. cylinder of compound vertical condensing engine,	...	52×48	77	$3\frac{1}{8}$	Double-ported valve. Steel spindle. Maximum pressure in steam chest 25 lbs.
Horizontal tandem compound condensing, 13-in. high-press. cylinder,	140	$11\frac{1}{2} \times 12$ main valve, 5×12 cut-off valves,	66	$2\frac{1}{8}$ main, $1\frac{1}{2}$ cut-off,	Meyer expansion gear. Short valve at each end of steam chest, fitted with relief ring. Main valve spindle prolonged to work low-press. valve. Steel spindles.
27-in. low-press. cylinder for above engine,	...	$14 \times 22\frac{1}{4}$	60	$1\frac{3}{4}$	Simple slide valve. Steel spindle. Maximum pressure in valve chest 38 lbs.
Horizontal condensing, 27-in. cylinder,	60	$17\frac{1}{2} \times 21$ main valve, $5\frac{1}{2} \times 21$ cut-off valves,	40	$1\frac{3}{4}$ main, $1\frac{1}{2}$ cut-off,	Meyer expansion gear. Steel spindles.
Compound tandem vertical condensing, 20-in. high-press. cylinder,	80	11×20 main valve, 6×20 cut-off valves,	54	$2\frac{1}{2}$ main, $2\frac{1}{8}$ cut-off,	Meyer expansion gear. Spindles prolonged to work low-press. valves. Steel spindles.
38-in. low-press. cylinder for above engine,	...	21×28 main valve, $6\frac{3}{4} \times 21$ cut-off valves,	32	2 main, $1\frac{5}{8}$ cut-off,	Meyer expansion gear. Steel spindles. Maximum pressure in valve chest 21 lbs.
Horizontal twin compound condensing, 20-in. high-press. cylinder,	120	$18 \times 22\frac{1}{2}$ main valve, $13 \times 22\frac{1}{2}$ expansion valve,	48	$1\frac{7}{8}$ main, $1\frac{5}{8}$ expansion,	Hartnell's automatic expansion gear. Steel spindles.
40-in. low-press. cylinder for above engine,	...	48×33 main valve, 12×33 cut-off valves,	105	$2\frac{1}{4}$ main, 2 cut-off,	Double-ported Meyer expansion gear. Steel spindles. Maximum pressure in valve chest 30 lbs.

Description of Engine.	Boiler Pressure.	Extreme Dimensions of Valve in inches.	Distance from centre of Valve to centre of Guide in ins.	Diameter of Valve Spindle at Stuffing Box in inches.	Remarks.
20-in. locomotive, . . .	170	11 × 19	53	$2\frac{1}{8}$	Simple slide valve. Steel spindle.
Horizontal twin compound condensing, 40-in. high-press. cylinder, . . .	90	37 × 35 main valve, 13 × 35 cut-off valves,	123	3 main, $2\frac{1}{2}$ cut-off,	Double-ported Meyer expansion gear. Steel spindles.
74-in. low-press. cylinder for above engine, . . .	...	54 × 62 main valve, 14 × 60 cut-off valves,	123	3 main, $2\frac{1}{2}$ cut-off,	Double-ported Meyer expansion gear. Steel spindles. Maximum pressure in steam chest 30 lbs.
10-in. vertical engine, . .	60	$6\frac{1}{4} \times 9\frac{1}{4}$	17	1	Simple slide valve. Steel spindle.
18-in. horizontal engine, .	50	$8\frac{3}{4} \times 16$	$30\frac{1}{2}$	$1\frac{1}{4}$	Simple slide valve. Wrought-iron spindle.
Horizontal tandem compound, 19-in. high-press. cylinder, .	70	$22\frac{1}{2} \times 15\frac{1}{2}$ main valve, $5\frac{1}{2} \times 15\frac{1}{2}$ cut-off valves,	72	2 main, $1\frac{1}{2}$ cut-off,	Meyer expansion gear. Steel spindles. Main valve spindle prolonged to work low-pressure valve.
28-in. low-press. cylinder for above engine, . . .	...	$19\frac{1}{2} \times 27$	$55\frac{1}{2}$	$1\frac{1}{2}$	Trick valve. Steel spindle. Maximum pressure in valve chest 20 lbs.
13-in. locomotive, . . .	120	$8\frac{1}{2} \times 11\frac{3}{4}$	48	$1\frac{1}{2}$	Simple slide valve. Yorkshire iron case-hardened spindle.
10-in. locomotive, . . .	130	$7 \times 8\frac{1}{2}$	45	$1\frac{1}{4}$	Simple slide valve. Yorkshire iron case-hardened spindle.
Horizontal twin compound condensing, 18-in. high-press. cylinder, . . .	120	$16 \times 7\frac{1}{2}$ main valve, $12 \times 17\frac{1}{2}$ expansion valve,	66	2 main, $1\frac{1}{2}$ expansion.	Hartnell's automatic expansion gear. Steel spindles.
32-in. low-press. cylinder for above engine, . . .	...	33 × 27 main valve, $8\frac{1}{4} \times 27$ cut-off valves,	87	2 main, $1\frac{3}{4}$ cut-off,	Double-ported Meyer expansion gear. Steel spindles. Maximum pressure in valve chest 34 lbs.
16-in. locomotive, . . .	120	$9\frac{1}{4} \times 15\frac{1}{2}$	46	$1\frac{1}{2}$	Simple slide valve. Steel spindle.
7-in. horizontal engine, . .	95	$3\frac{3}{4} \times 5\frac{1}{4}$	15	$\frac{3}{4}$	Simple slide valve. Steel spindle.
34-in. vertical engine, . .	65	22 × 32 main valve, 17 × 32 expansion valve,	66	$2\frac{1}{8}$ main, $1\frac{5}{8}$ cut-off,	Automatic expansion gear. Steel spindles.

Valve Pins.—In consequence of the slight movement on the pins of ordinary valve gears a large surface pressure may be allowed. 1500 lbs. per square inch of surface is frequently taken, but this figure should be used with caution, and varied according to circumstances. Where the reciprocations exceed 500 per minute this pressure would be found too great, and 1100 would agree more closely with practice. The surface being understood to denote the length of the pin multiplied by the diameter, it follows that A being the area of the valve, P the maximum pressure of steam in the valve chest, μ the coefficient of friction, and p the surface pressure allowed, the surface of the pin will be—

$$\frac{AP\mu}{p}.$$

Also, if D and L equal the diameter and length of the pin, respectively,

$$D = \frac{AP\mu}{pL}\ ;\ \text{and}\ L = \frac{AP\mu}{pD}.$$

The proportion of D to L may be as 1 : 1·25. Then,

$$D = \sqrt{\frac{\frac{AP\mu}{p}}{1{\cdot}25}}.$$

Balanced Valves.—Fig. 16 shows a modern form of relief ring for a large slide valve. The packing consists of a series of wedge-

Fig. 16.

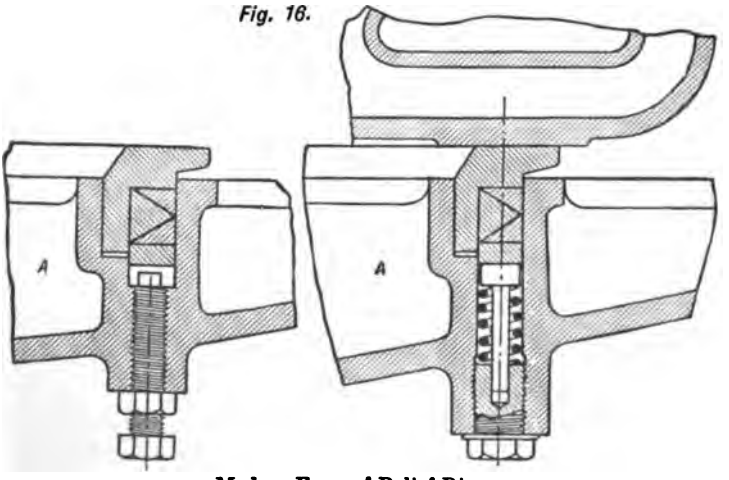

Modern Form of Relief Ring.

shaped rings, which are held against the relief ring by a series of springs arranged round the circumference. The lift of the rings is regulated by a number of screws also arranged circumferentially, and alternating with the springs. Tightness between the valve

and the ring is obtained by a scraped joint, the necessary pressure between the faces being given by the above mentioned springs. The space A is either connected to the condenser, or provided with a cock opening to the atmosphere, as circumstances permit, so as to avoid an accumulation of pressure inside the relief ring.

In Fig. 17, a single spider spring is employed to give pressure between the joints, and circumferential tightness is obtained by a bored ring pinned to the valve.

Fig. 17.

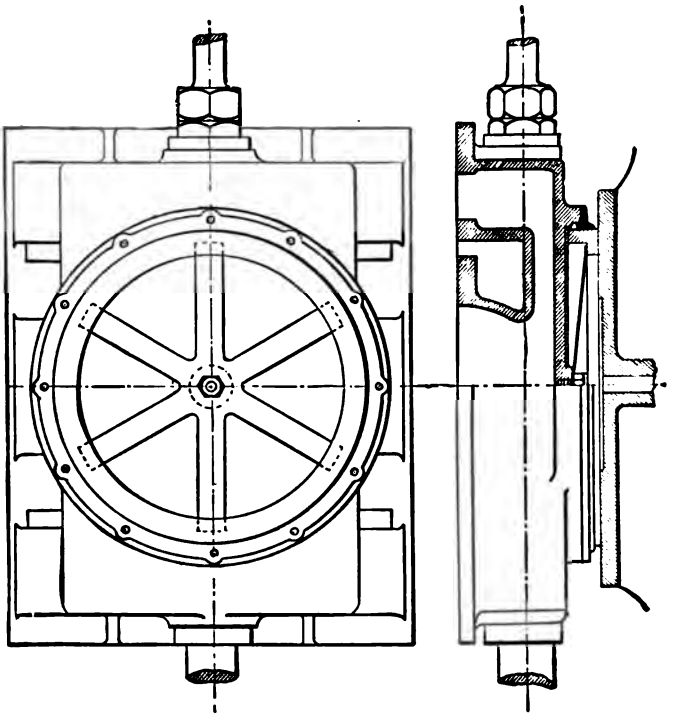

Common Relief Frame.

In practice it does not appear that the presence of a balancing ring reduces the diameter of the valve spindle to any appreciable extent; it being considered unsafe to rely upon the former relieving the valve, so that in the event of the relief ring becoming ineffective the engine may still be run with safety.

Piston Valve.—A more effectual way of avoiding excessive friction of the valve gear is by the use of a piston valve. The first cost, however, is excessive, and its use entails large clearances. Fig. 18 is given as an example of a piston valve.

Fig. 18.

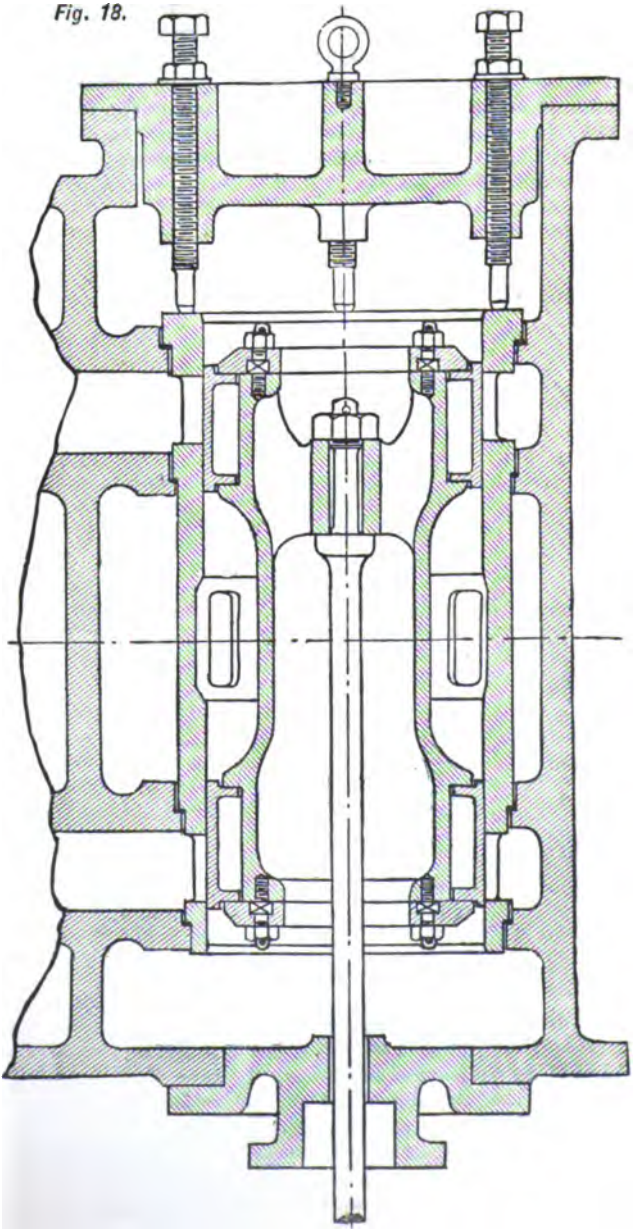

Piston Valve.

The design is adapted for working with superheated steam, and it will be noticed that a loose liner is fitted and held in place by adjustable screws in the top cover, and is thus free to expand without distortion. The joint is made by a ring of asbestos at each step in the liner. The rings are solid and float in the piston between the scraped faces formed by the body and the junk rings.

Fig 19.

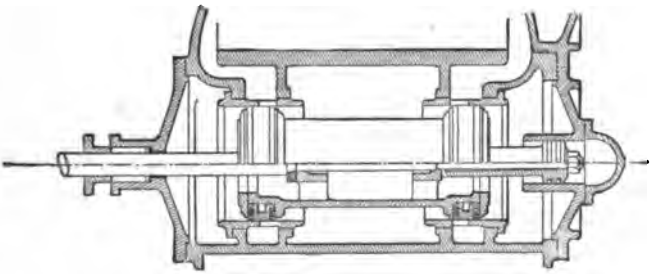

Common Piston Slide Valve.

Fig. 20.

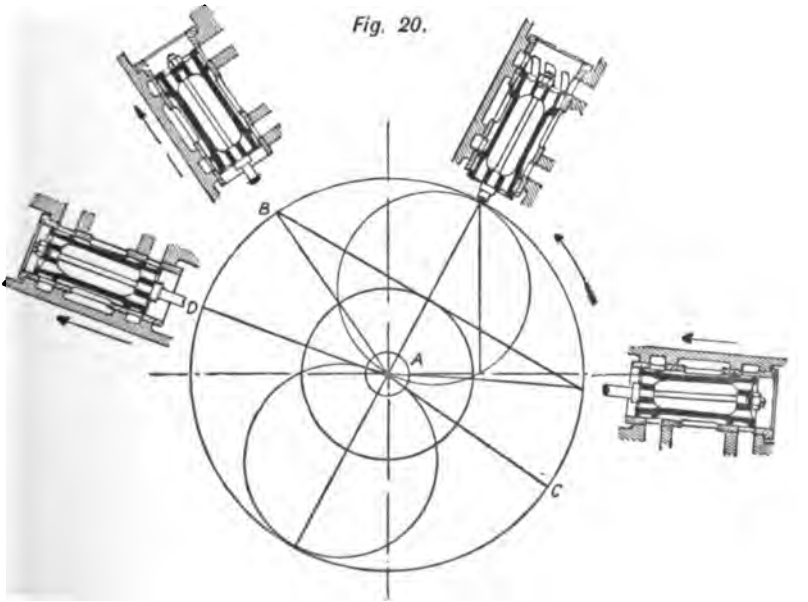

These junk rings are held in place by a number of studs having special provision to prevent shaking loose, a very necessary precaution for higher speeds. The steam enters between the steam ports, and the exhaust is at each end. With this arrangement the

real position of the eccentric in relation to the position of the crank will be directly opposite the position indicated in the valve diagram; that is to say, the eccentric will follow, and not lead the the crank.

In Fig. 19 is shown another form of piston valve. The two pistons are part of a cylindrical casting carrying losses through which the valve spindle passes, and to which it is secured. The packing of the pistons consists of metallic spring rings held in position by junk rings at each end of the valve. To prevent the rings springing into the ports diagonal bars are cast round the entrance of the latter. These bars, of course, contract the steam passage, and in calculating the area of steam and exhaust openings should be allowed for. The usual practice of having loose liners for the working barrels is followed; and the balance piston relieves the link motion of the weight of the valve spindle and other details.

The valve diagram is appended (Fig. 20), but as the construction is exactly similar to that of the slide diagram, it is unnecessary to enter upon an explanation. An inspection of the figure will show the cut-off is at A B—about 75 per cent.—and compression and release are at A C and A D respectively.

CHAPTER II.

SLIDE EXPANSION GEARS.

CONTENTS.—Expansion Gears - Diagram for Expansion Valves—Application of Ellipse Diagram to Expansion Gears—Valve Diagram—Design of Expansion Valves—Meyer Expansion Gear—Rapid and Sluggish Cut-offs —Application of the Diagram—Expansion Regulator—Meyer Gear with Inside Cutting Edges—Double-Ported Meyer Gear—Reynold's Valve Diagram, for Single Valve, and for Meyer Gear—Classes of Automatic Expansion Gear—Hartnell's Governor—Diagram for Link Expansion Gear—Application of the Diagram—Ruston-Proctor's Expansion Gear—Crank Shaft Governor Expansion Gear—Westinghouse Governor—Robinson's Shaft Governor—Importance of Sufficient Range.

IT has been remarked that for an earlier cut-off than $\frac{5}{8}$ stroke, an ordinary slide valve is not suitable. In order to obtain satisfactory efficiency of steam at pressures now common, it is necessary, even in compound engines, to cut-off at a much earlier point in the stroke than can be suitably effected by a single valve; and the problem of attaining the required degree of expansion without disturbing the proper points of release and compression presents itself. The mechanism employed to attain this end is termed Expansion Gear.

Expansion Gears.—Expansion gears may be classed under three heads:—1. Expansion gears in which the cut-off is fixed. 2. Expansion gears in which the cut-off is varied by hand. 3. Expansion gears in which the cut-off is automatically controlled by the engine through the operation of a governor.

Fixed expansion gears, except in combination with a governor acting on the throttle system, or for the low-pressure cylinders of compound engines, are now little used, and are only suitable for engines having a definite and unvarying load, which condition very rarely obtains. However, as the consideration of this class embodies the principle of most expansion gears, it will be convenient to investigate it in the first instance.

In Fig. 21, A is a slide valve having steam ports B B formed at each end. This valve is virtually an ordinary slide, with the addition of the ribs C C, which form the outer side of the steam ports B B. Sliding upon the back of this valve is the expansion valve D, driven by a separate eccentric, the sole function of which is to control the admission of steam. It is easy to see that by arranging the eccentrics in a proper manner, the expansion valve can be made to slide past the outer edges G G of the ports B B, at any desired point in the stroke.

Diagram for Expansion Valves.—Before considering the expansion valve, the main valve must be designed. This is done exactly as in the case of an ordinary slide valve. As release and compression are the only functions controlled by this valve, it should be designed with reference to these points as in Fig. 8, the

cut-off being left to fall where it will. The width E equals that of the maximum opening to steam, as found by calculation. The width of the bar C is empirical.

Fig 21.

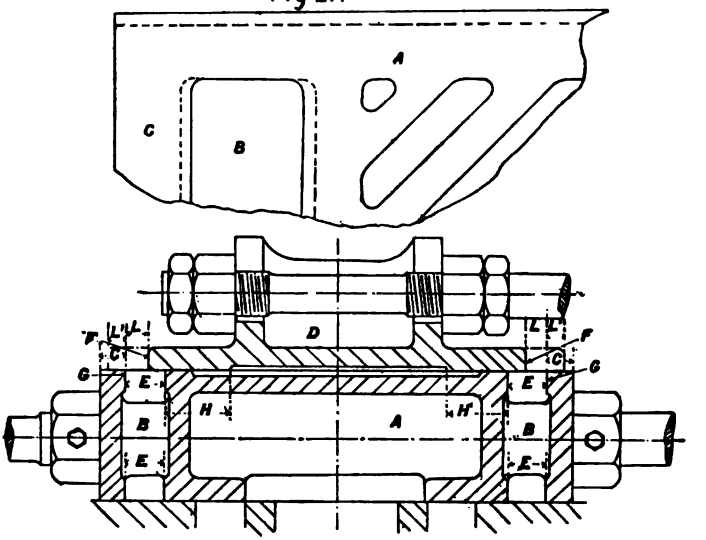

Slide Expansion Valve.

In Fig. 22 let A B represent the position of the crank, and A C and A D the positions and throws of the main and expansion eccentrics respectively. Join C D, and draw E C equal and parallel

Fig 22.

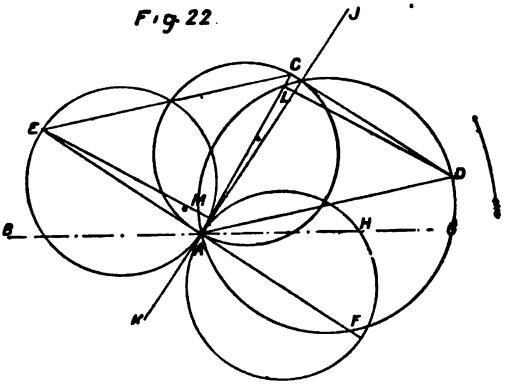

to A D. Produce A E to F. On A E and A F, describe circles as shown. These are known as resultant circles; and in the manner in which the primary and secondary valve circles illustrate the

action of the simple valve, these resultant circles give the motion of the expansion valve relative to the main; and this relative motion is such as would be obtained by an eccentric whose throw and position are given by the line A E, when the main valve is supposed to be fixed, and in its central position.

In this instance the peculiarity of the Zeuner diagram is still present. The real position of the crank relative to the eccentrics, A C and A D, is A B; but in tracing the action of the steam, the motion is supposed to be in the direction of the arrow.

In each diagram, unless there is a direct statement to the contrary, the arrow shows the *assumed*, and not the real direction of rotation.

The motion will now be traced throughout a complete revolution.

Starting at the beginning of the forward stroke, the assumed crank position being A G, the expansion valve will be distant A H to the left of its central position on the main valve; which distance is given by the intersection of the crank position and the secondary resultant circle. The expansion valve continues to move from left to right until A J is reached; at which point it arrives at its central position relative to the main valve; that is to say, the centres of the two valves will coincide, and will have, relative to one another, the position shown in Fig. 21; but Fig. 21 does not show their true position relative to the cylinder ports. A J is at right angles to A F. The expansion valve now travels to the right of its relative central position until A E is reached, at which point it attains the end of its relative travel to the right. At A B, the expansion valve is still to the right, as shown by the intersection of the crank with the primary circle. At A K, relative mid position is again reached; and when the crank is at A F, the valves are at their maximum distance apart. This displacement now decreases, and at A G the revolution is completed.

In order to show that the resultant circles give exactly the action of the two valves relative to one another, draw on A C and A D the main and expansion valve circles. Take any position of the crank, say A C. The intersection of the crank line with the main eccentric circle A C shows the distance of the main valve to the left of its central position on the ports, as explained above; and the intersection of the crank line with the expansion eccentric circle also shows the distance of the expansion valve to the left of its central position. The distance apart of the two valves relative to each other is obviously C L. The crank line A C intersects the resultant circle in M, also showing the distance apart of the two valves. It remains to show that A M = C L. Join E M and D L. Then, because E A was made parallel and equal to C D, the angle E A C is equal to the angle A C D; and the angles E M A and D L C are right angles and equal to each other (Euclid, Bk. iii., Prop. 31). Then, in the triangles E M A and D C L, because the side E A = the side C D (by construction) and the angle E M A = the angle C L D, and the

angle E A M = angle L C D, the side A M = the side C L (Prop. 26, Bk. i., Euclid's Elements).

By reasoning similar to the above, the resultant circles can be shown to give exactly the relative positions of valves for all positions of the crank, and for any form of expansion gear operated by eccentrics in the ordinary manner.

Now, consider the effect of altering the throw and position of the expansion eccentric. In Fig. 23 let O A and O B represent the

Fig 23.

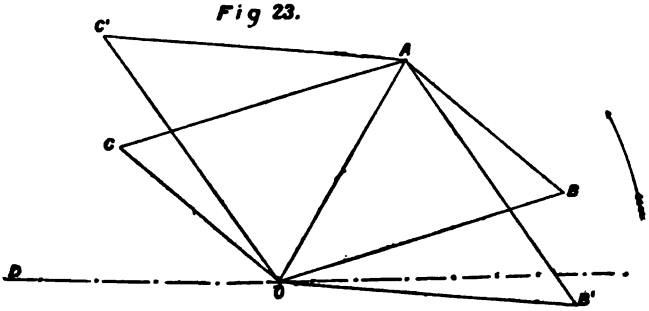

main and expansion eccentrics, and O D the real position of the crank. Then O C will be the line giving the resultant circles. Let the expansion eccentric be advanced to O B'. Then O C' is the centre on which the resultant circles are described. The expansion valve will therefore attain its central position on the

Fig 24.

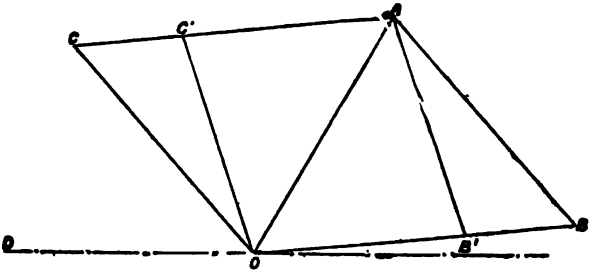

main valve earlier in the stroke, and the relative travel of the valves will be greater.

In Fig. 24 O D is the real position of the crank; O A is the main, and O B the expansion eccentric. O C is the centre of the resultant circle. Let the travel of O B be reduced to O B'. Then O C' will be the altered position of O C. The expansion valve will therefore attain its central position on the main valve earlier in the stroke, but the relative travel will be less.

Application of Ellipse Diagram to Expansion Gears.—The resultant circles can be reduced to an ellipse. It will be seen

Fig 25

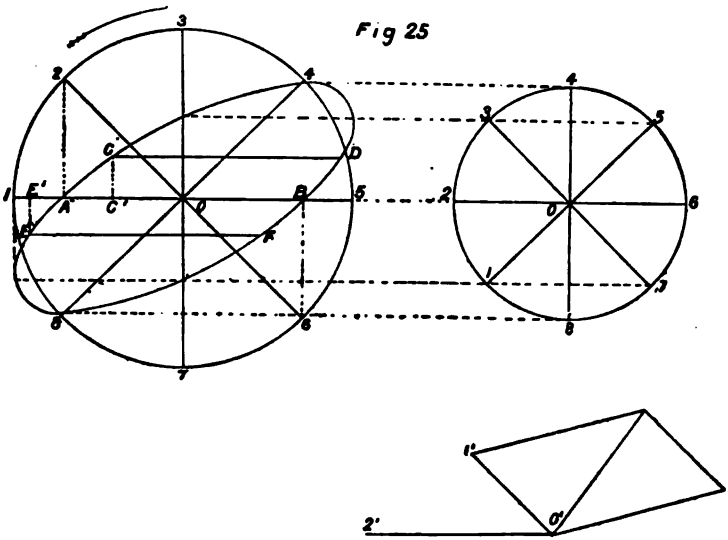

by an inspection of Fig. 25, that the angle of the centre line of the resultant circles is put back 90° from its real position in a similar

Fig 26.

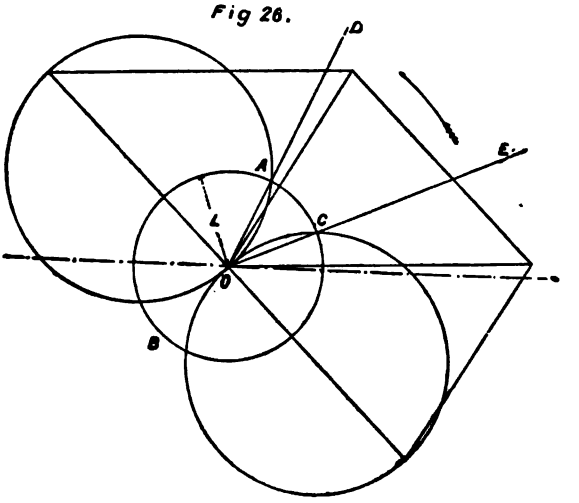

manner to the advance angle in the simple valve ellipse diagram. In the present figure, A and B are shown to be central positions; 4 and 8 extreme positions.

In order to consider the effect of lap, let L in Fig. 26 equal the dimension L in Fig. 21. From O, draw O A D. This line will represent the position of the crank when the expansion valve has closed the port in the main valve. Again, suppose L is positive. The expansion valve would then have the form shown by the dotted lines in Fig. 15; and L′ (Fig. 21) would equal L (Fig. 26). Where the circle A B C cuts the secondary resultant circle, draw the line O C E. This line is the position of the crank when cut-off takes place; the lap being positive. The following statements are deduced from the foregoing observations:—When the lap is positive, the point of cut-off is given by the intersection of the lap circle with the secondary resultant circle. When the lap is negative, the point of cut-off is given by the intersection of the lap circle with the primary resultant circle. When there is no lap the point of cut-off is given by a line at right angles to the centre line of the resultant circles.

In the valve ellipse diagram, if the lap be negative, draw C D parallel to, and remote a distance equal to the lap, above the line 1·5. The line C D crosses the ellipse at C. Then C′ is the position of the piston at cut-off; 1·5 representing the whole stroke. Let the lap be positive. E F is then the line that determines the point of cut-off, it being drawn below the line 1·5. E′ denotes the piston position at cut-off.

Having premised these introductory remarks, the actual design of the valves will now be considered.

Valve Diagram.—On the diagram of the main valve draw the crank position when it is desired that the expansion valve shall cut-off. In Fig. 27, O A is the line. The position and throw of the expansion eccentric are not determined by any exact construction. The travel is usually made greater than that of the main valve. T × 1·2 is good practice; T being the travel of the main valve. As to the angle of advance, it has been shown that increasing this increases the diameter of the resultant circles; so that other things being equal, the cut-off will be quicker. Hence, in practice, it is found that the angular advance is considerable. Eighty degrees in advance of the main eccentric is very suitable, but some makers have a constant angle, which in several cases is 90°; that is, directly opposite the crank.

Let O B (Fig. 27) represent the throw and position of the expansion valve eccentric decided upon. Draw the resultant circles. The secondary circle intersects O A at C. O C is the amount of positive lap on the expansion valve.

When the cut-off is nearly at right angles to the centre line of the resultant circles, it becomes difficult to see the exact point at which intersection takes place. If, however, a circle be described on the expansion eccentric line O B, the difficulty can be avoided; for the distance O C is also given by the distance between the intersection of the main valve circle with the cut-off line, and the intersection of the expansion eccentric with the same line. In the

figure, D and E are the points of intersection; and D E equals O C. Take another position, say O F. O G is the necessary lap, which is also given by H F. Here the lap is negative.

With regard to the port opening for any particular crank position, it is evident that when the lap is positive the port opening is given by the distance between the expansion valve lap circle, and the intersection of the resultant circle with the crank line. Thus, in crank position O J, the port opening is K L. But the actual port opening can never be greater than the width of the port

Fig. 27.

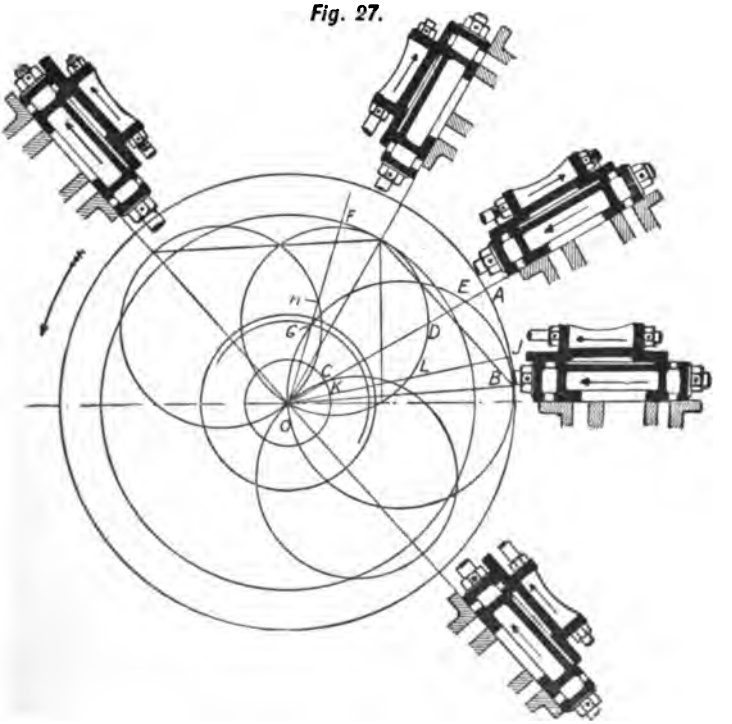

through the main valve; so that it would be more correct to say that K L is the distance of the edge F (Fig. 21) from the edge of the main valve port B. Suppose the lap O C is negative. Then the distance of edge B from edge G, would be L O + O K, for the crank position O J.

Design of Expansion Valves.—Referring now to Fig. 21, it will be noticed that the expansion valve is not machined the whole length of the face, but only for a width, H, past the edge of the port in the main valve. In order that steam shall not enter the port B from the inner edge of the face of the expansion valve, the

distance H should be at least equal to the diameter of the resultant circles, which give the amount of relative motion of the two valves.

In expansion gears of this class, the cut-off should be equalised by giving unequal laps to the expansion valve. The required amount of lap for each end can be found by drawing in the crank position on the return stroke corresponding to the same piston position at cut-off in the forward stroke; and the intersection of this line with the resultant circle indicates the lap required to make the cut-off fall at the same period as in the forward stroke. The angularity of the eccentric-rods has a disturbing effect, which is generally too slight to be regarded.

Fig. 28.

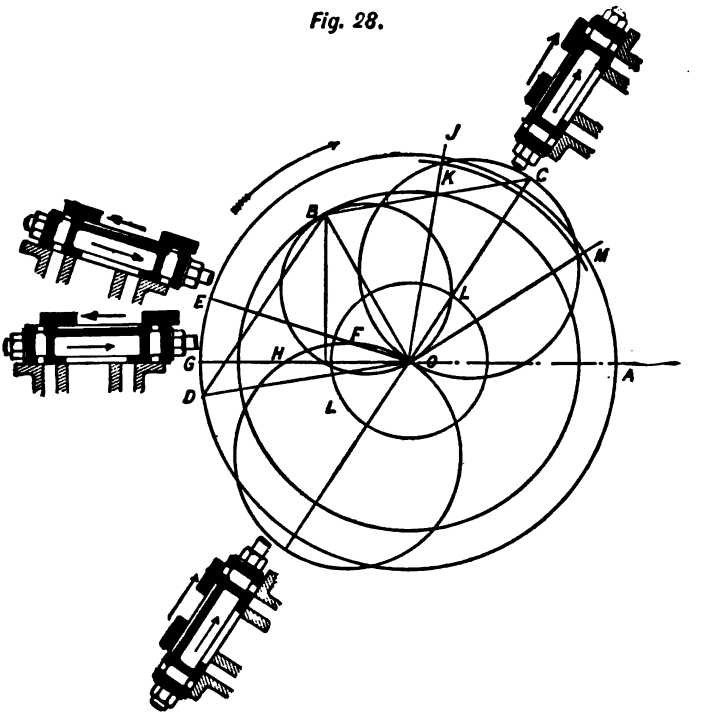

Meyer Expansion Gear.—This is by far the most common of the variable hand expansion gears. The range of expansion is obtained by varying the lap of the cut-off valves.

In Fig. 28, O A is the real position of the crank relative to the main eccentric O B. L L is the outside lap circle of the main valve, and cut-off occurs at O C. Decide upon the travel of the expansion valve, and from O as centre, and with radius equal to the throw of the eccentric, describe the circle A E D. Draw B D parallel to O C; and join O and D. Then O D is the position of

the cut-off eccentric relative to the position of the crank O A. By this construction the centre line of the primary resultant circle will coincide with the line of the main valve cut-off. The position O D is not imperative; but for reasons which will be made known shortly, it is a most convenient setting.

Now the nut of the expansion plate B (Fig. 29) being screwed by a right-handed thread, and the nut of plate C being screwed by a left-handed thread, the plates can be made to approach to or recede from one another, according to the direction of rotation of the valve spindle. This movement of the plates will alter the point of cut-off to any desirable extent.

Let the required range of expansion be from the beginning of the stroke, to the point of cut-off by the main valve.

To find the position of the expansion plates relative to the main valve, it is only necessary to draw the crank line for the required point of cut-off; for its intersection with either of the resultant circles determines the position. Take the position of the crank O E (Fig. 28). The line O E cuts the secondary resultant circle at F. O F is the required positive lap; or the amount that the edges J, of the plates B and C, overlap the edges K of the main valve, when B and C are central on the main valve, which position is shown in Fig. 29.

Take the point of earliest cut-off O G (Fig. 28). Here O H is the required positive lap. At the latest cut-off O C, the lap will be O C, and as O C intersects the primary resultant circle, it will be negative. It follows, therefore, that O H + O C is the movement

Fig 29.

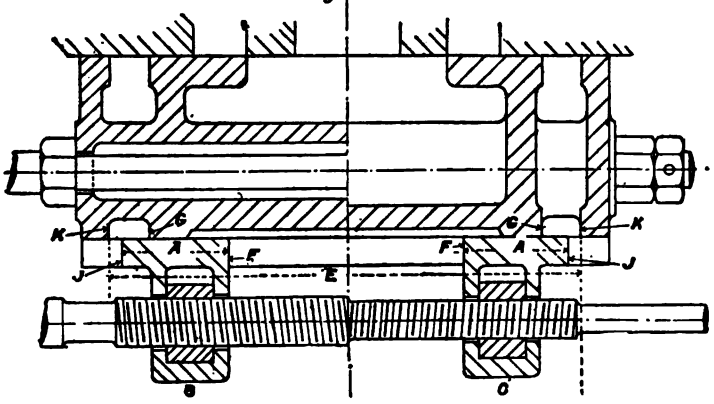

Meyer Expansion Gear.

of each plate on the spindle, in order to vary the cut-off from O G to O C.

The reason for choosing O C for the centre line of the resultant

circles will now be seen. At crank position O C the expansion plate will be at its extreme position to the right, relative to the main valve. But the negative lap necessary for this grade of expansion is equal to O C, so that it is evident the plate will re-open the port immediately after O C. The main valve, however, has cut-off at the same instant; therefore, re-opening by the expansion valve will not affect the efficiency of the gear. The latest possible cut-off by the expansion valve is given by the centre line of the primary resultant circle. When this centre line falls on, or after, the line of main valve cut-off, re-opening, as previously stated, is immaterial. For example, take a crank position O J. O K will be the negative lap. The plate attains its extreme relative position at O C. It will now recede and re-open the port when O M is reached, but as cut-off by the main valve has already occurred, this re-opening is of no consequence.

Rapid and Sluggish Cut-offs.—A further study of the diagram (Fig. 28) will show that the two valves are moving at their minimum relative speed at O C, hence the most sluggish cut-off will be obtained when the crank is at O C, the valves having a negative lap equal to O C. A line at right angles to O C will give the crank position when the cut-off is most rapid, and at that point the cut-off valve will have neither inside nor outside lap. This is a point well worth noting, and applies to most classes of slide expansion gear. In link expansion gear the best results will be obtained when the expansion valve has no lap, the cut-off then being at the instant of most rapid relative movement for all positions of the die in the link.

Application of the Diagram.—Another way in which the port in the main valve may be re-opened is by the edges F of the cut-off plates sliding past the edges G of the main valve.

Let P = diameter of resultant circles.
W = width of port in main valve (E in Fig. 29).
L = lap of expansion valve for earliest cut-off.

Then, in order to avoid this re-opening, the width A (Fig. 29) should be

$$P + W \pm L.$$

For positive lap take $+L$; and for negative lap $-L$.

It is necessary to add a little extra width to the dimension given by the foregoing expression to ensure tightness. A quarter of an inch will in most cases be sufficient addition, allowing, of course, for any inequality of lap due to connecting-rod influence, as previously explained.

The diagram shows that O C (Fig. 28) is the greatest negative lap. The dimension E in Fig. 29 must be great enough to allow of both plates being set to this negative lap. Therefore, E must not be less than 2 A + twice the greatest negative lap. In some cases it may be necessary to slope the ports in order to obtain E. Fig. 30 illustrates a case in point.

Expansion Regulator.—In order that the spindle of the cut-off valves may be revolved to vary the expansion, it is prolonged

through a stuffing box at the back of the valve chest; and has a wheel at or near the end of it. An index is usually provided, to

Fig 30

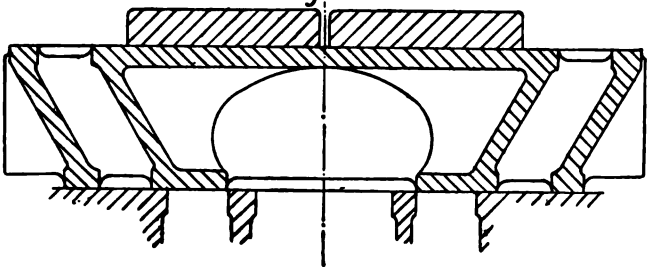

indicate the grade of expansion. Fig. 31 shows a neat arrangement of cut-off regulator. In this design the wheel is keyed on

Fig 31.

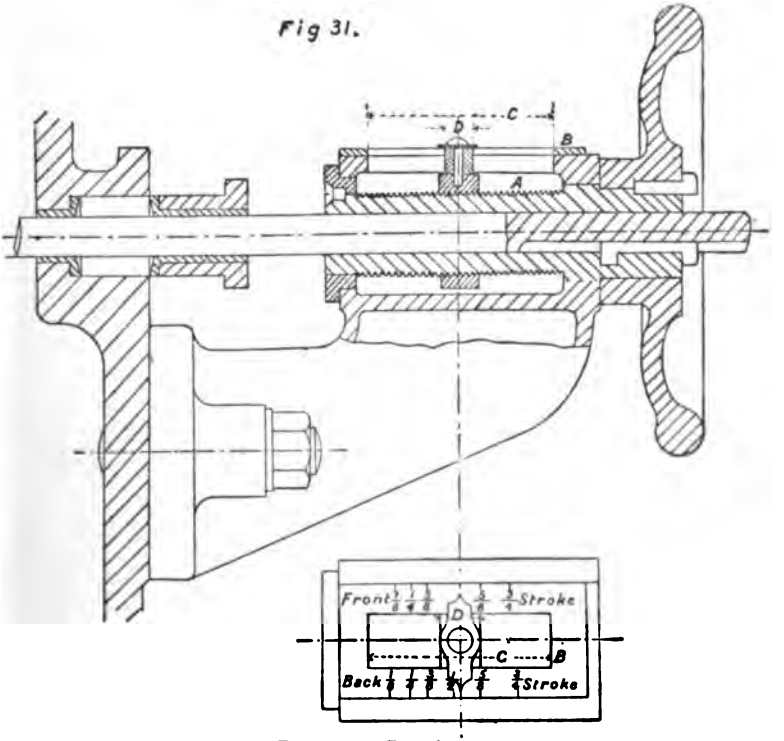

Expansion Regulator.

the brass sleeve A, the latter being mounted on the valve spindle by means of a feather key, thus permitting of a horizontal move-

ment of the valve spindle, whilst the regulating wheel is at rest. The brass plate B is stamped, so that the finger correctly indicates the grade of expansion. The minimum length of the slot C in the regulator is given by the expression

$$T + \frac{M N}{n}.$$

Where T = thickness of finger nut (D in Fig. 31).
M = movement of each plate in varying the cut-off from earliest to latest.
N = number of threads per inch in nut of cut-off valves.
n = number of threads per inch on sleeve of regulator.

The joint of the expansion-valve spindle with the eccentric-rod must be of such design as will allow the spindle to turn freely round.

Meyer Gear with Inside Cutting Edges.—Some Meyer gears are arranged to cut off by their inner edges, in which case

Fig. 32.

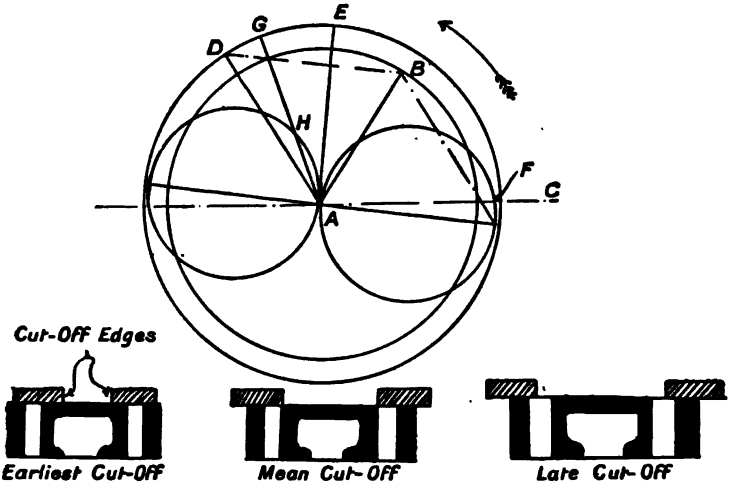

the main eccentric *leads* instead of follows the cut-off eccentric. This feature is an advantage in tandem engines in which one cylinder is fitted with Corliss gear and the other with Meyer gear, as it permits of the steam valves of the Corliss gear being operated by the cut-off valve eccentric, without the interposition of a rocking lever with a fulcrum in the middle. In Fig. 32, A B is the main eccentric, A D the cut-off eccentric, in relation to the assumed position of the crank A C. In order to cut off at crank position A C—the beginning of the stroke—the positive lap must be A F; to cut off at A E the valves must be edge and edge; and to cut off at A G the negative lap must be A H. The corresponding valve positions are shown in the figure.

Double-Ported Meyer Gear.—The Meyer gear is shown in its double-ported form in Fig. 33. The passages G G conduct

Fig. 33.

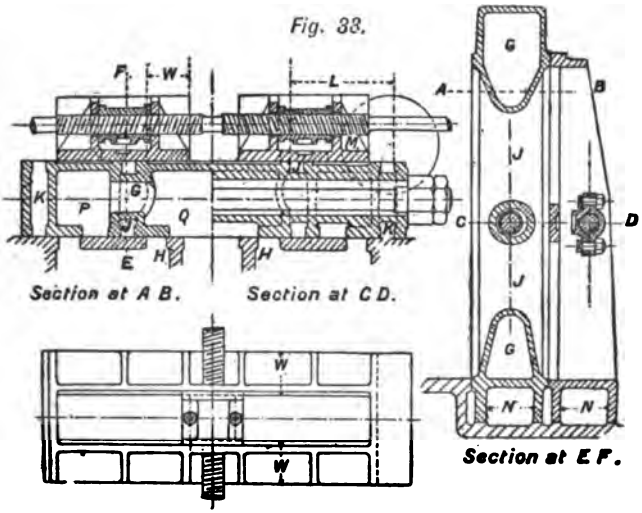

Double-ported Meyer Gear.

Fig. 34.

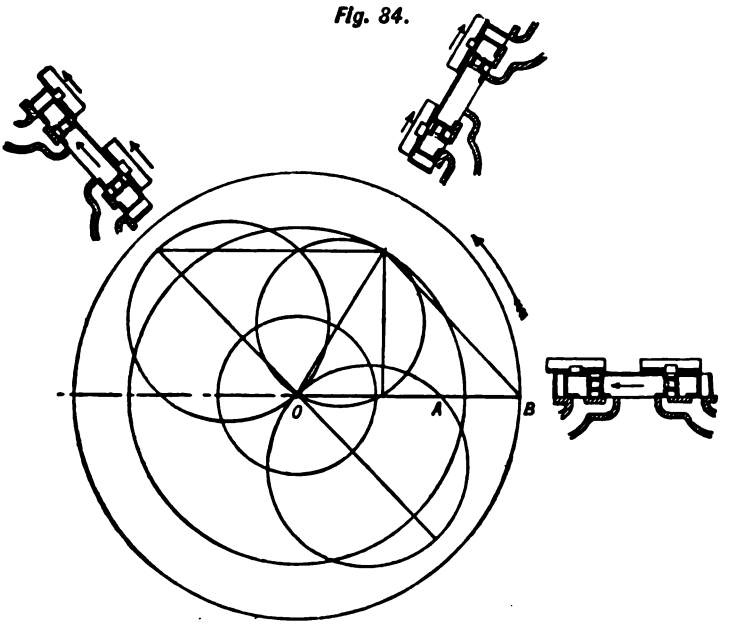

the exhaust from P to Q. The sum of their areas should equal that of the steam port H. The ports J J are shown widened out to compensate for the reduction of area caused by G G. The area of ports J J and K K, should in all cases be equal to the area of the steam ports. The dimension L requires attention, or it may happen that when the main valve is open for lead, the plate M will cover the port J, and steam will not be admitted at the proper time. In order that such a thing may be avoided, L should not be less than

$$l + W + N + P.$$

Where l = lead of main valve at each port.
W = width of cut-off plate.
N = lap at latest cut-off, which will, in most cases, be negative.
P = distance of cut-off valves from relative central position, when crank is on dead centre.

Fig. 34 is the diagram for the gear, and O A = P in the foregoing expression, and is the distance of the cut-off valves to the left of the relative central position when the crank is at O B. The expansion valve will open the port J at a quicker rate than the main valve will open to steam; which is as it should be. In every case, it is advisable to make L greater than the dimension given by the above expression.

The nuts of the expansion valves are shown divided. This permits of the valve spindle being kept the same diameter for each

Fig. 85.

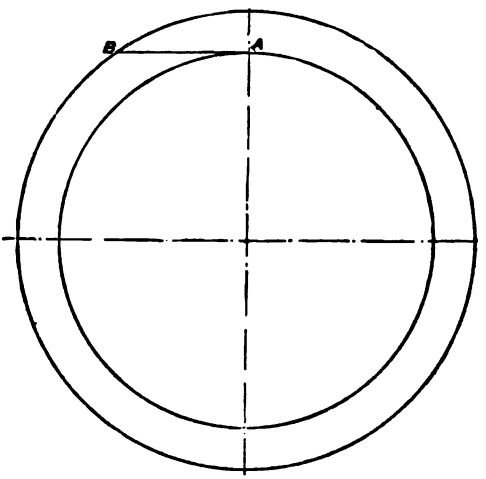

nut. The recess at the back of each nut is provided for the reception of a spring, which tends to keep the plate on the face of the main valve. In order that the spindle may be passed through the

valve chest when the expansion plates are in position, it is necessary to have sufficient clearance to press back the back half of each nut, to clear the thread of the valve spindle. In Fig. 35, the inner circle represents the diameter of the valve spindle at the bottom of the thread, and the outer circle the diameter at the top of the thread. It will be necessary to push the nut back a distance equal to A B, before the spindle can be passed into position. When the steam chest is big enough to allow of the expansion plates being placed with their faces to the main valve spindle, the cut-off spindle can be passed, and the plates afterwards brought into their proper position. Then the above condition is not imperative.

The circle to the right of the plan view in Fig. 33 represents the steam inlet pipe. The main valve is, of necessity, of large size, and it was desirable to keep the steam chest as small as possible. Both the valves slide over the supply pipe, but in consequence of the deep feet N, the orifice is not obstructed to any serious extent.

With Meyer gears, when the cut-off is equalised for any one grade of expansion, it will not be equal for the other grades unless the two threads on the expansion valve are given unequal threads, a refinement rarely found in actual engines. In practice, it is usual to equalise the particular grade of expansion which corresponds to the normal load on the engine.

Reynold's Valve Diagram.—The action of the Meyer gear is very clearly shown by means of the Reynold valve diagram. It will be convenient to consider the diagram for a simple valve before treating of expansion gears.

In Fig. 36, A B represents the crank, and B C the connecting-rod of an engine. The piston-rod is suppressed; and therefore D and E are the extreme positions of the piston, and F is the central position. Divide the crank-pin circle into any number of equal parts; 36 divisions is the most suitable number. The corresponding piston positions for each of the crank-pin positions can be readily obtained. Thus, taking crank position A B, F C is the displacement of the piston from its central position.

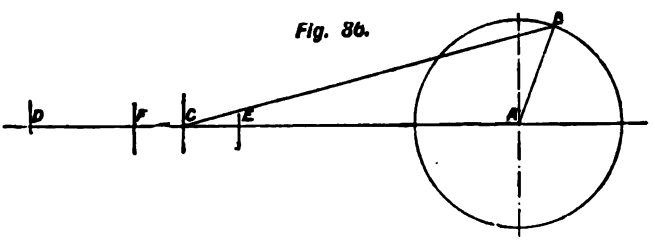

Reynold's Valve Diagram.

Now, consider the line A B, in Fig. 37, to be the crank-pin circle of Fig. 29, drawn out into a straight line. Let this line be divided into 36 equal parts. Then each division will correspond to an

angle of 10 degrees on the crank-pin c
piston from its central position, for e
obtained from Fig. 36, and transferre
similar to H K J is obtained. The tota
be the stroke of the piston to the sca
its extreme position at H. At D, w
axis A B, the piston is in its central
87 degrees from the starting point. K
front stroke is attained. From K to
stroke.

Reynold's Valve Diagram for S
curve must now be obtained for the valv
breadth of this curve will represent the
convenient scale for the breadth may
axis of the curve must be the same le
Let the angular advance of the eccentric
is the position for crank dead centre;
cross the vertical 40 degrees before A,
correct position.

Take any position, say L L. The pist
central position, and, at the same time,
the valve from its central position. At
position on the ports, and the intersectio
curve indicates the then position of th
lap be known. Draw C C parallel to A
equal to the known outside lap from A
Draw C Q horizontally. Its intersectio
gives the piston position. This position
to a scale of percentages, and the positio

E E is a line parallel to A B, and G
is at E, and compression at E′. Let it
shall occur at 93 per cent. in both front
93 per cent. on the scale for the forward s
to intersect the piston curve at S. From
Then, if the inside lap on the front end
the distance between F and the vertical
93 per cent. From 93 per cent. on the
draw U V vertically, to intersect the pi
V horizontally, to intersect the valve cu
the amount of inside lap necessary to rel
back stroke. If the intersection of these
curve fell on the axis A B, no inside lap
if the intersections fell on the opposite sid
lap would be required.

Reynold's Valve Diagram for M
the case of an expansion gear. Having,
explained, obtained a curve for the expa
connect this curve with the piston and
manner as will give the true positions c

DUE Apr 18

If this book is not returned on or before the above date a fine of five (5) cents per day will be incurred by the borrower.

When you have finished reading this book do not wait until the time limit has expired, but return it to the library as soon as possible. Someone is waiting to read it.

Books returned late cannot be renewed.

GENERAL LIBRARY
University of Michigan

Form 96 8-31 50M

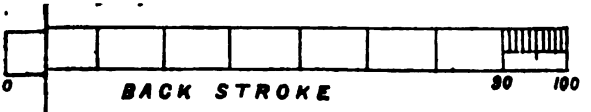

eynold's Valve Diagram for Meyer Gear.

and expansion valve for any point in the stroke. It will be found convenient to plot down the main valve and piston curves on one sheet, and the expansion valve curve on a separate sheet of tracing paper, so that the latter may be set to any desired position, and the modifications effected by altering the angle of advance observed.

Fig. 38 shows the piston, main, and expansion-valve curves in position. The angular advance of the main eccentric is the same as in the previous case—namely, 40 degrees. The expansion-valve curve is placed for an angular advance of 90 degrees—that is, directly opposite the crank. A horizontal line drawn at any point of the crank-pin line A B, will give the then positions of piston and valves. And conversely, if any piston position be chosen, a vertical drawn from that position will intersect the piston curve, and a horizontal drawn from the intersection will give the valve positions.

Take the crank position C D. E F is the distance of the piston from its central position, and E H and E G will be the respective displacements of the main and expansion valves from their mid positions.

Let it be required to cut off at 20 per cent. of the stroke. From 20 per cent. on the scale for the front stroke, draw the vertical to intersect the piston curve at J. From J draw the horizontal, crossing the main and expansion curves at K and L respectively. K L is the necessary negative lap to accomplish this grade of expansion in the front stroke. From 20 per cent. on the scale for back stroke, draw the line vertically, to meet the piston curve at M. From M, draw the horizontal, intersecting the valve curves at O and N. O N is the negative lap for the front end of the valve, to effect this grade of expansion. If the horizontals K J and M O crossed the curves at P and Q—that is, where P and Q cross each other—there would be no lap whatever; but if the verticals crossed on the opposite side of P and Q, the lap would be a positive quantity.

The equalisation of cut-off for any particular grade of expansion having been effected, it is easy to observe the inequality for the other grades; and herein lies the chief advantage of the diagram. The expansion-valve curve being drawn on a separate sheet of tracing paper, the angular advance may be altered by merely moving the position of the tracing; the effect of which is instantly manifested. This is another merit of the Reynold's diagram.

Classes of Automatic Expansion Gear.—Automatic expansion gears are made to vary the cut-off:—1. By varying the travel of the expansion valve. 2. By varying the angular advance of the expansion eccentric. 3. By varying both angle and travel of the main eccentric.

In Fig. 39, O A is the crank, O B the main eccentric, and O C the expansion eccentric. Let the circle F G be drawn with radius equal to the negative lap. Cut-off will occur at crank position O D. Now, suppose the throw of O C to be reduced to O C′. Cut-off then

occurs at O E. This diagram illustrates the principle of expansion gears of the first class.

Hartnell's Governor.—Fig. 40 is a sketch of the well-known Hartnell governor combined with a link expansion gear. When the engine is running at the normal speed, the die in the swinging link occupies the position indicated. When an increase of speed takes place, the balls fly out, raising the radius rod, which shortens the travel of the expansion valve. Cut-off will therefore be earlier in the stroke. When the speed falls below the normal, the radius

Fig. 89.

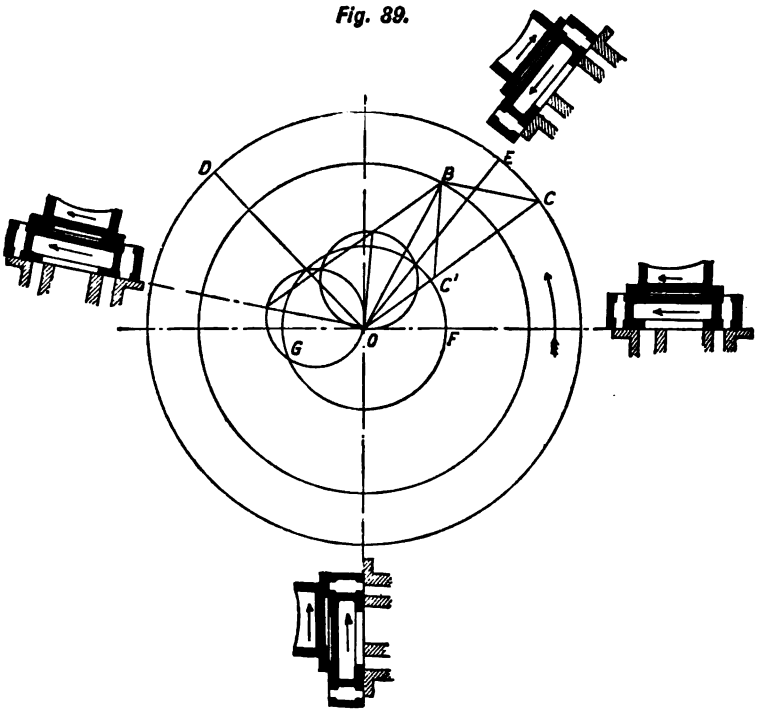

Valve Action shown for Cut-off at O E.

rod is lowered. This action increases the valve's travel, and cut-off is later. The governor itself is a spring-loaded one. Between certain limits, any desired speed may be maintained by adjusting the helical spring in the head.

Diagram for Link Expansion Gear.—No exact construction can be given to determine all particulars of this gear. Generally the positions of the crank at early and late cut-off, and the maximum and minimum travels of the expansion valve would be decided upon. But it is necessary to assume either the angular

advance or the lap of the expansion valve before a diagram can be constructed.

Let O E, Fig. 41, be the line of latest cut-off in relation to the crank position O N revolving as shown; O A the throw and position of the main eccentric, and O B and O B′ the throws and position of the expansion eccentric for maximum and minimum travels respectively. O C is the resultant circle corresponding to O B; and O D the resultant circle for O B′. O E intersects the resultant circle for maximum travel at F. O F is the required

Fig. 40.

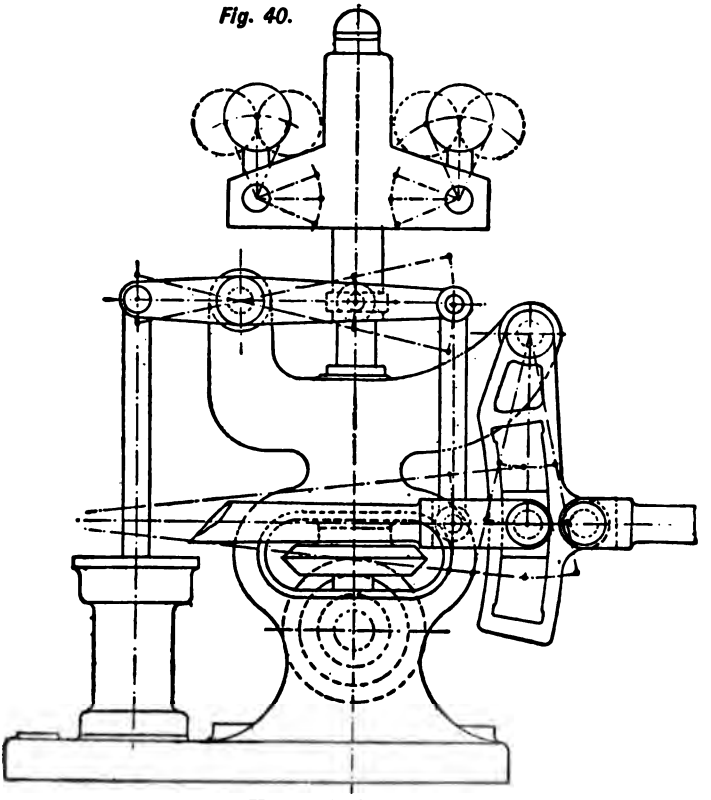

Hartnell's Governor.

negative lap. Draw the negative lap circle F G, intersecting the resultant circle for minimum travel at G. O H is the position of the crank at earliest cut-off. It may be that this range of expansion is not sufficient. Decreasing the negative lap would not alter the total range of expansion, as far as the cut-off valve is concerned, but would cause O E and O H to fall earlier in the stroke. But O K is the cut-off bv the main valve. O E can be made to coincide

with O K by giving negative lap O L. This will alter O H to O M, which alteration has increased the actual range of expansion by the angle H O M. Decreasing the angular advance of the expansion eccentric would also increase the range of expansion, as may be shown by construction.

Fig. 41.

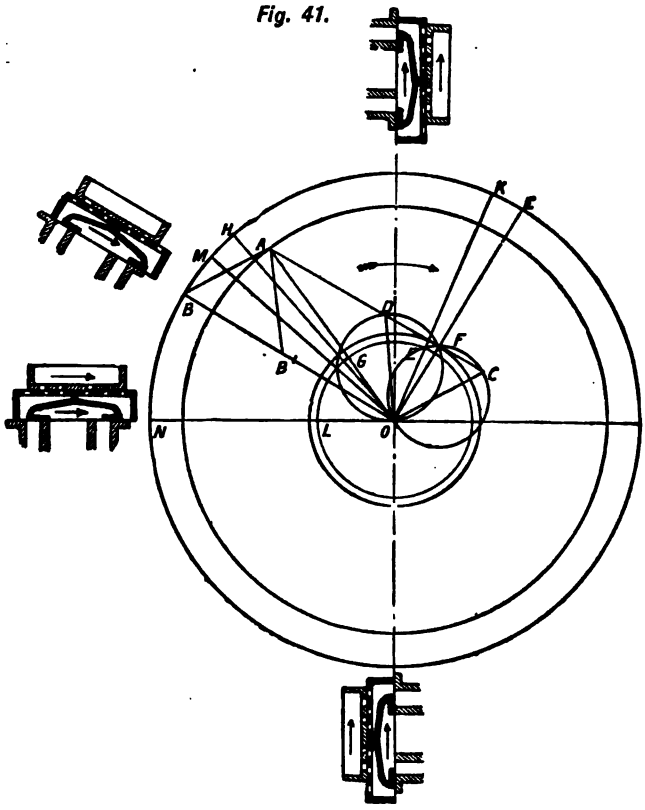

Diagram for Link Expansion Gear.

Application of the Diagram.—The valves for the link expansion gear may assume the form shown by Fig. 42, the proportions being as follows :—

The sum of the width of the ports C, may be equal to one and a half times the width of the port in the main valve on the face next the cylinder ports to ensure a good steam line.

A = D + C − L +, say, ¼ inch for tightness.

Where D = diameter of largest resultant circle.
C = width of port (see Fig. 42).
L = negative lap.

Note. − L would become + L if lap were positive.

B should be not less than $\frac{L}{N} + D$.

Where L = lead of main valve.
N = number of ports on each side of expansion valve.
D = greatest distance of expansion valve from its relative central position, when crank is on dead centre.

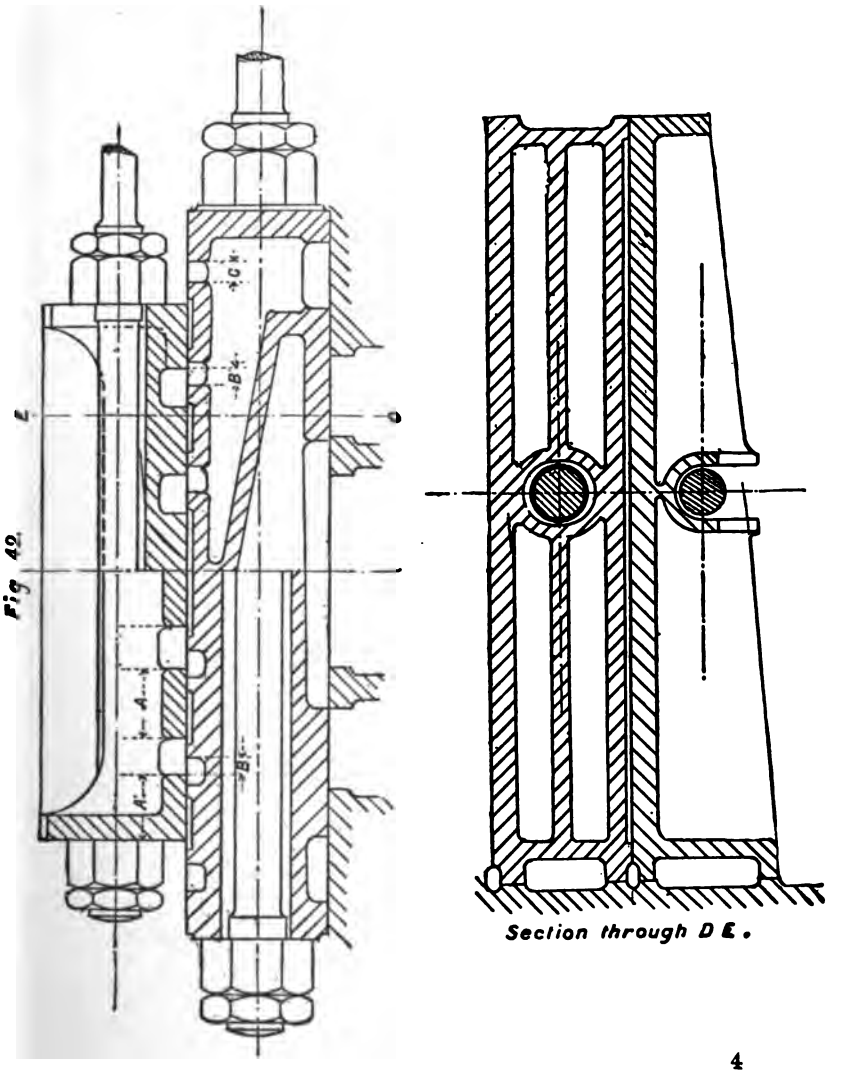

Fig 42.

In practice, B would be found to exceed the dimension given by the above expression. The ports are often divided equally along the face of the valve. The rules just given can then be employed to ascertain whether the action is satisfactory or not.

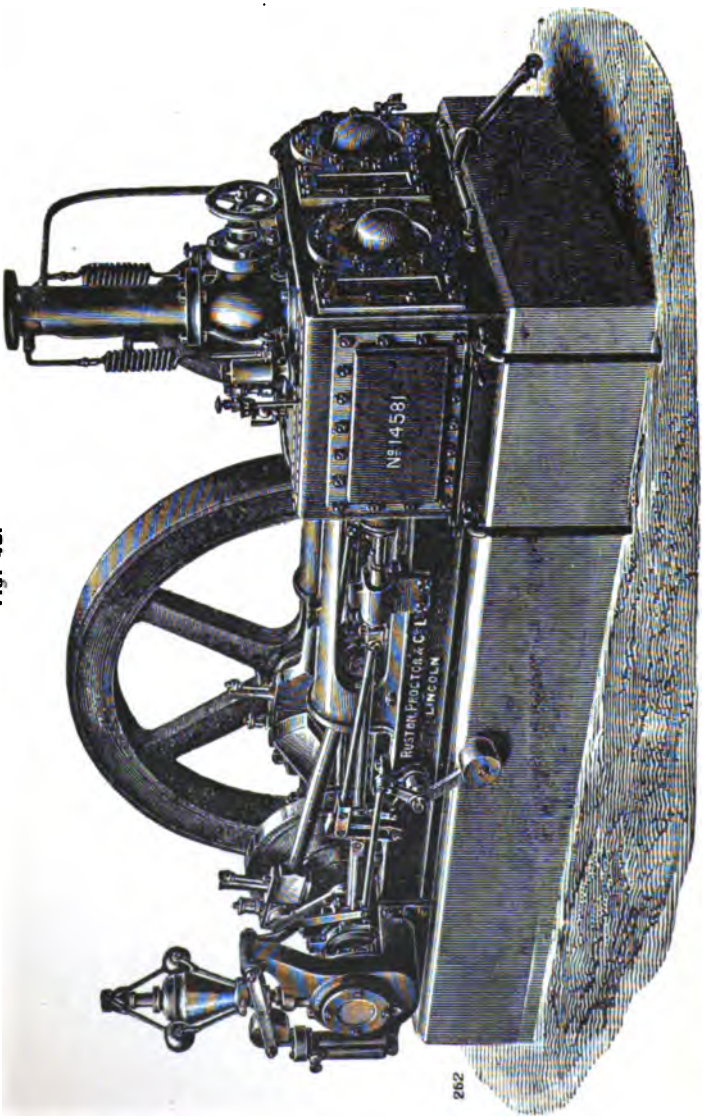

Fig. 48. Automatic Expansion Gear.

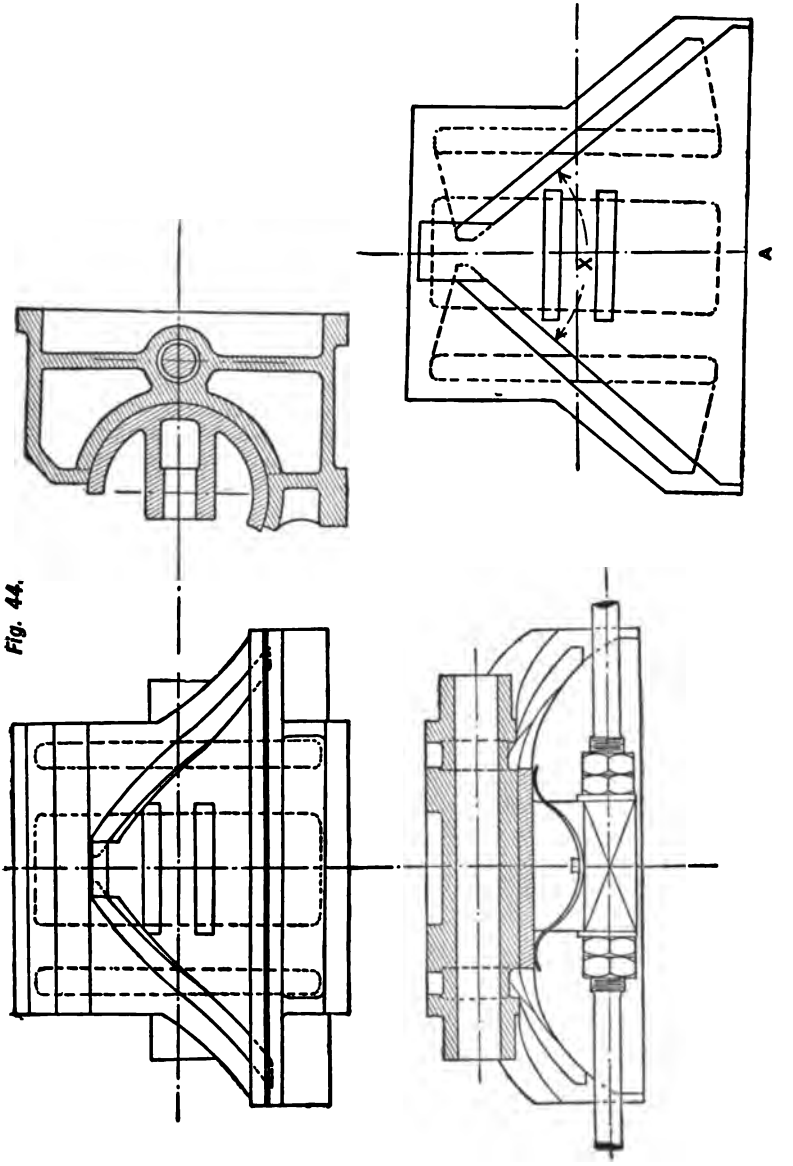

Fig. 44.

Ruston-Proctor's Expansion Gear.—Fig. 43 illustrates the automatic expansion gear made by Messrs. Ruston, Proctor & Co., Lincoln. The governor is of the Porter type, and is actuated from the crank shaft by means of bevel gear. The radius link is pivoted on the bottom end, and the lifting link from the governor raises or lowers the radius-rod as circumstances require. A dash-pot is fitted to give steadiness to the governor, and the balance weight relieves the latter from all encumbrance due to the radius-rod.

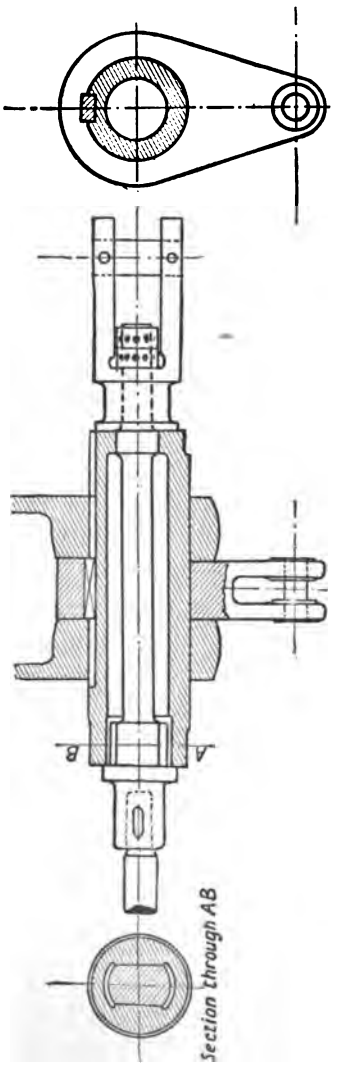

Fig. 45.

Rider Gear.—Figs. 44 to 46 illustrate the Rider valve gear. This gear is the outcome of an attempt to arrange the Meyer gear for automatic cut-off. The latter type requires several revolutions of the spindle to move the expansion valves through the full range of expansion; but, as the governor lever moves through a relatively small angle, it is evident that considerable modification is required in design. The Rider valve is circular in cross-section and has two spiral cut-off edges, one being a right-hand and the other a left-hand spiral. The valve works in a circular bored face on the back of the main valve, which has spiral ports of the same pitch as the expansion valve; and it is evident that when any partial rotation of the expansion valve takes place the edges will approach or recede from the cut-off edges in the main valve, according to the direction of partial rotation. A range of cut-off approaching six-tenths of the stroke of the engine can be obtained under ordinary circumstances by a movement of about 40 degrees, and this is well within the limits of a satisfactory angular movement of levers in connection with the governor attachments. The view A on Fig.

44 is a development of the Rider valve and circular face on back of main valve. A suitable angle for the ports (see X in Fig. 44) is 80 degrees. If made larger, the valves become unduly long, and, on the other hand, if much smaller, the expansion valve must be caused to rotate through an inconveniently large angle in order to

Fig. 46.

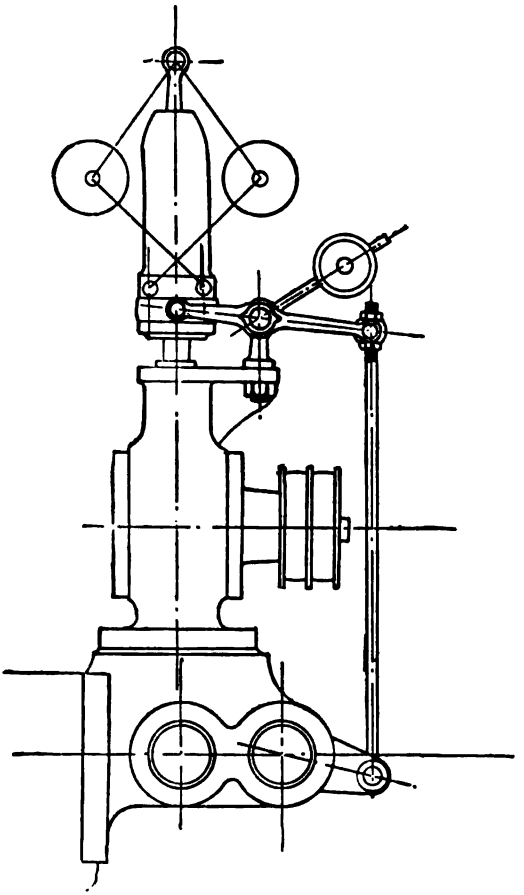

compass the full range. Fig. 45 shows a satisfactory method of connecting the governor lever with the valve spindle, whilst the connections between the governor and this lever will be clearly traced from Fig. 46.

The Rider gear, although apparently somewhat cumbersome, gives very good results if actuated by a sufficiently powerful

governor, and is very largely used by Continental builders for engines of medium power.

All problems relating to this gear can be solved from the valve diagram for the Meyer gear, previously explained.

Crank-Shaft Governor Expansion Gear.—It has been remarked that the grade of expansion can be varied by altering the angular advance of the expansion eccentric. Fig. 47 is a diagram for this class of gears. O A is the position and throw

Fig. 47.

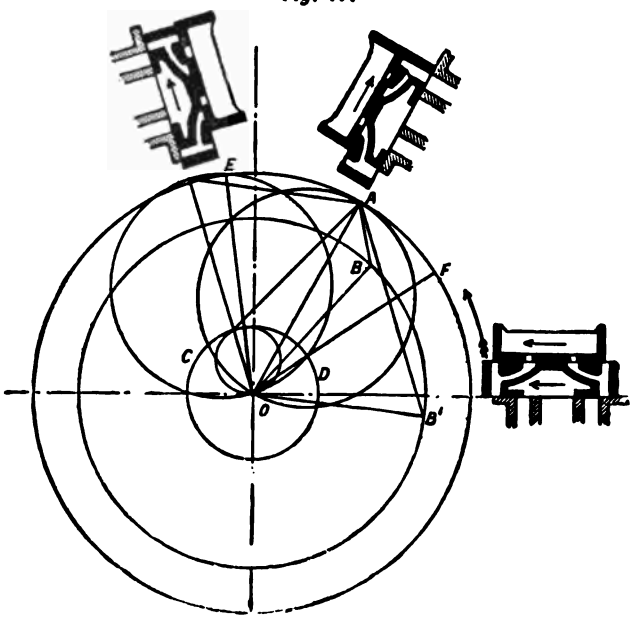

Valve Action shown for an Early Cut-off.

of the main or distribution eccentric; and O B the expansion eccentric; C D is the lap circle, which, in this instance, is negative. Cut-off is at O E. Suppose B moved round the shaft to position O B′, then O F is the cut-off line.

Fig. 48 illustrates a device whereby the angle of O B can be varied according to circumstances. The figure is self-explanatory, and it is only necessary to remark that the design admits of considerable adjustment. In the first place, the point of attachment of the springs to the levers carrying the weights B B can be altered; the position of the weights themselves can be adjusted by means of the nuts on the levers; and the connecting links A A are also adjustable.

Fig 48.

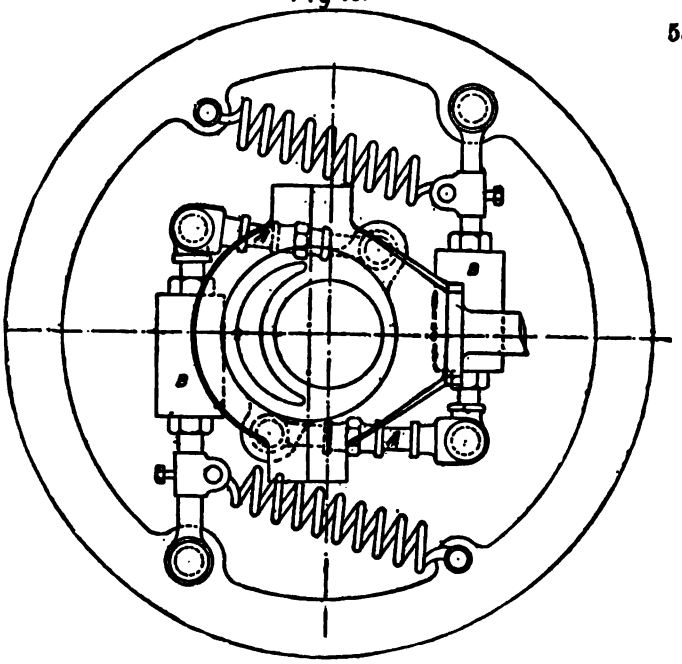

Crank-Shaft Governor Expansion Gear.

Fig. 49.

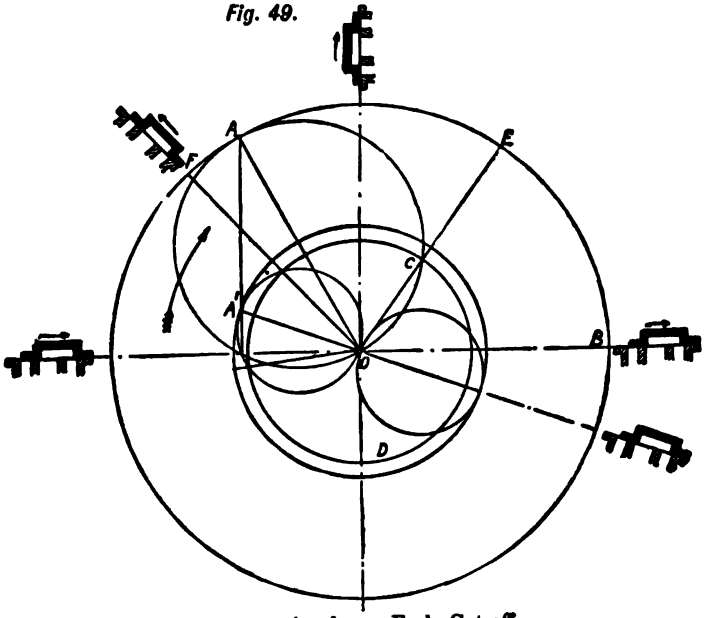

Valve Action for an Early Cut-off.

The third method of obtaining a range of expansion is by varying both the throw and position of a simple slide valve eccentric. The principle of this class of gears is set forth in the accompanying diagram.

Let O A (Fig. 49) represent the throw and position of the eccentric relative to the true position of the crank O B. C D is the outside lap circle, and cut-off is at O E. Let the eccentric be altered so that its throw and position are given by the line O A. The lap circle will remain the same, and the cut-off will therefore be at O F.

Westinghouse Governor.—As a typical example of this class of gears, the Westinghouse governor and eccentric is selected.

Fig. 50.

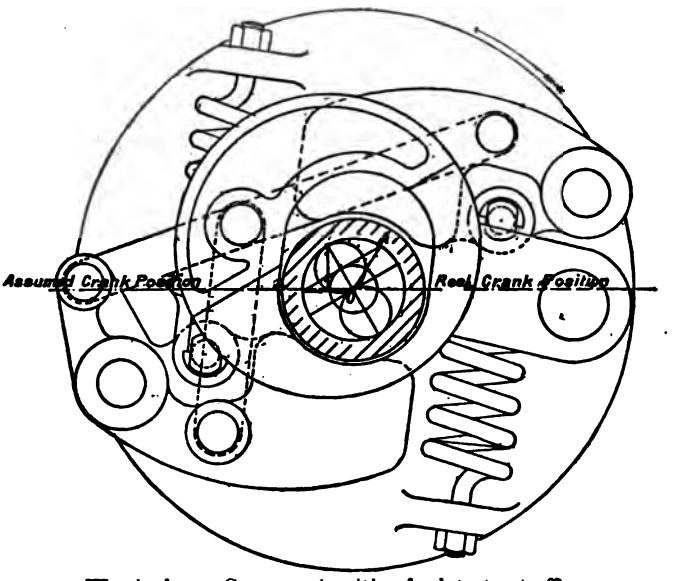

Westinghouse Governor (position for latest cut-off).

Fig. 50 shows the position of the parts for the latest cut-off, which is at O A. In Fig. 51 the gear is in position for an early cut-off, which is at O A. The real and assumed crank positions are indicated on each figure, as is also the direction of rotation. The valve diagrams show that as the governor moves from latest to earliest cut-off, the lead increases. This governor operates upon a piston valve, which is the most suitable form for crank-shaft governors, as the work required to move the valve passes partly through the springs.

Crank-shaft governors find much favour in America. The

Dick and Church governor, as made by the Phœnix Iron Works Company, is representative of its class.

Fig. 51.

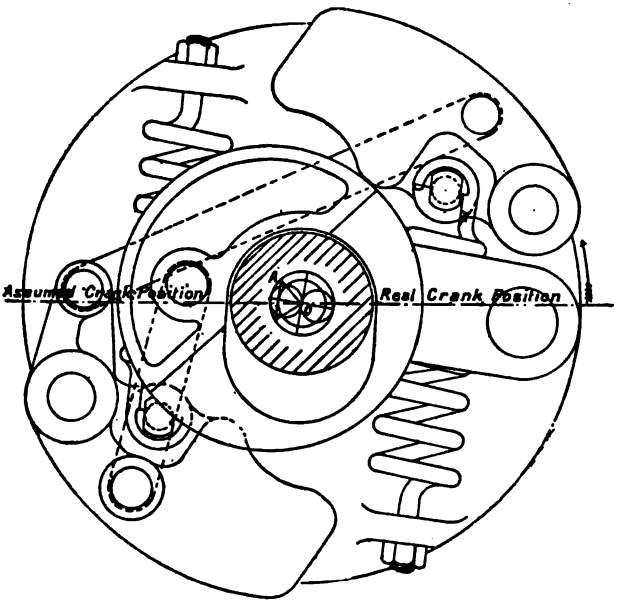

Westinghouse Governor (position for an early cut-off).

Robinson's Shaft Governor.—The type of crank-shaft governor introduced by Mr. A. S. F. Robinson embodies several novel features and improvements. Before describing the arrangement, it will be interesting to consider the defects of some governors of this type, from which it will be seen that the present example has been well thought out in every detail.

A fault of many shaft governors is that the centrifugal action has a disturbing influence on the springs, tending to camber them axially. This action, combined with heavy pins ineffectually lubricated, renders close governing impossible. Another defect is the employment of very heavy weights. This means that the pins, springs, and gear in connection therewith must be of large size and the friction thereof considerable. The large weights cause considerable noise in working, and when the engine slows down after the stop valve is closed the heavy springs bring the weights down on the stops with a violent hammer. The absence of any means of speeding the engine by the governor when in motion is another defect common to most shaft governors; and when any permanent alteration of speed is desired, it must be effected by stopping the engine and adjusting the springs until the exact

degree of adjustment is found, which is not always obtained by the first trial. Other shaft governors have a defect in that the inertia of the valve gear has a disturbing effect on the revolving weights, causing them to be jerked violently as the valve reaches the end of its travel.

Referring to the accompanying illustration of the Robinson shaft governor (Fig. 52), the levers A are pivoted on pins B, and by the action of centrifugal force the curved springs C are deflected through the pull of the links D. One end of each of these springs is carried by a cast-iron hinge E, but the other ends are attached to a sliding crosshead F, which is in turn connected to the eccentric sheave, the slots G permitting of the necessary movement. The crosshead is guided in a straight line, whereby the lead remains constant throughout the whole range of the governor. Connected to each of the bridges H and J are two thin steel strips K, which allow of the necessary movement in the slots, but at the same time resist any disturbing influence arising from the inertia of the valve gear. The speeder gear consists of a right- and left-hand screw working into nuts on the hinges E. As the speeder lever M is moved from right to left the rack N revolves the right- and left-hand screw, thus bringing the ends of the springs closer together. A higher speed of revolution is therefore necessary to open out the springs to a given extent, consequently the speed of the engine is thereby permanently increased. When the speeder lever is moved in the opposite direction the tension on the links D is reduced, and the speed of the engine correspondingly lessened. The effect is the same as increasing or decreasing the counterpoise on a centre-weight governor.

The illustration is taken from the working drawing of a governor for a 60 H.P. engine made by Sir W. G. Armstrong, Whitworth & Co. It is arranged to vary the valve travel from $2\frac{1}{16}$ inches to 1 inch.

Importance of Sufficient Range.—There is one point in the design of automatic expansion gears for engines driving electric generators, or for any service where the whole load may be removed suddenly, which is of the utmost importance. The gear must be arranged to have a range that will prevent any steam entering the cylinder when the governor is in its top or outer position; that is to say, the earliest cut-off must be at lead point. Should this condition be neglected, there is great danger of excessive racing at light loads, which may lead to a destructive wheel burst.

2 Feet

CHAPTER III.

LINK MOTIONS.

CONTENTS.—Single Eccentric Reversing Gear—Valve Diagram for shifting Eccentric Gear—Stephenson's Link Motion—Open and Crossed Rods—Valve Diagram for Stephenson's Link Motion—Mr. Macfarlane Gray's Method of describing the Characteristic Line—Exact Valve Diagram—Crank-Pin Diagram—Best Arrangement of Gear—Link Motion made by the North-Eastern Railway Company—The Slot Link—The Double-Bar Link with Eccentric-Rods Inside—The same with Eccentric-Rods Outside—Proportions of Links—Gooch's Link Motion—Eccentrics Driving Obliquely—Valve Diagram for Gooch's Link Motion—Crank-Pin Diagram—Best Arrangement of Gear—Allan's Straight Link Motion—Diagram for Allan's Gear—Expansion Gears and Link Motions Combined.

To enable an engine to run in either a forward or backward direction, it must be fitted with link motion, or some other equivalent device; and it remains to discuss various gears by means of which reversal is effected.

Single Eccentric Reversing Gear.—The simplest form of reversing gear consists of an eccentric, the angle and throw of which can be varied at will by moving it across the shaft. This device, although simple and efficient, would be very inconvenient, especially on an engine of large size, or on one that required frequent reversal; and the arrangement is here described, not because of its practical utility, but because of the principle involved—the principle of link reversing gears.

The single eccentric reversing gear consists of a plate A, secured to the crank shaft B by means of a key. The eccentric C is provided with two slots, whereof the larger is to allow of the eccentric being moved on the shaft, so as to take either the position shown by the upper or lower diagram, Fig. 53 or any intermediate position between the extreme limits. The second slot is made to pass the bolts D D, which are securely fixed in the plate A. This arrangement permits of the eccentric being held in any position between E and F.

In the diagram the position of crank is indicated, and also the centre line of the eccentric. It will be understood that when the eccentric is secured so that it coincides with the line K E—its extreme position in one direction—the engine will run in the direction of the arrow, and when the eccentric has the position K F, the motion is reversed. The reason of this is clear. Consider first the upper diagram, where the crank is on dead centre, and the line K E is the position of the eccentric. The cylinder is supposed to lie to the left of the figure. Motion by piston effort

at this position is, of course, impossible, but suppose the crank moved by some means in the direction of the arrow. The eccentric moves through the same angle in the same direction. This movement will manifestly drag the valve spindle, and consequently the valve, from the back end of the steam chest towards the front end. When the crank is at the back dead centre, K J, the eccentric, if correctly set, will have opened the back steam port for lead, and any movement of the crank in the arrow's direction will cause the port to be opened wider. The engine would therefore run in the direction indicated, or "over," as it is commonly termed. If the crank were moved in the opposite direction, the eccentric still being held in the position K E, the valve would have the back port open to lead as before, but motion of the eccentric in that direction would close the port, thus preventing the engine running "under."

Fig. 58.

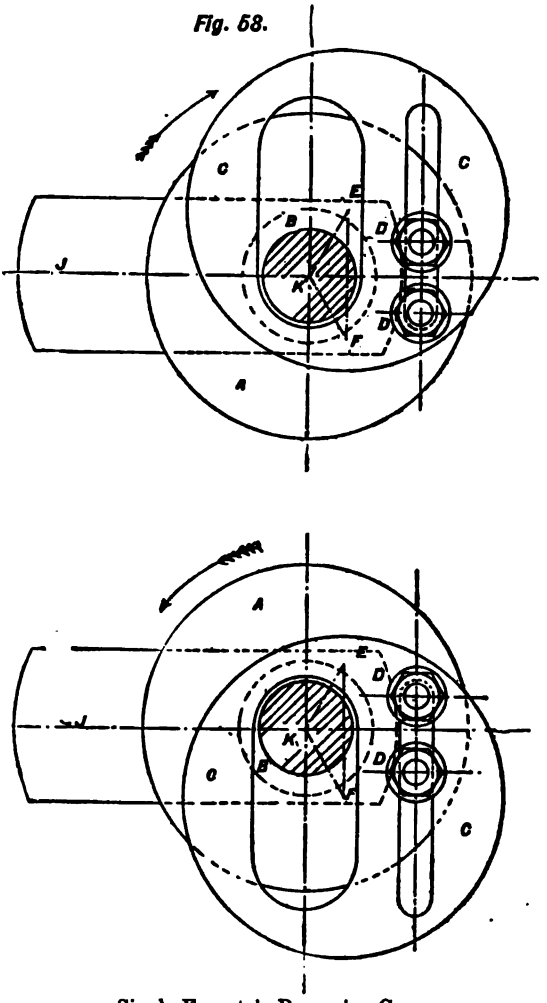

Single Eccentric Reversing Gear.

Now, consider the action when the eccentric coincides with the line K F, which position is shown in the lower figure. The crank may be supposed to be on dead centre as before. Any movement in the arrow's

direction opens the back port wider, and the engine is therefore free to revolve in a counter-clockwise direction. Moving the crank in a direction opposite to that indicated would close the back port, thus preventing clockwise running.

Valve Diagram for Shifting Eccentric Gear.—The Zeuner valve diagram is well adapted to the solution of problems in connection with the shifting eccentric gear.* Let A B represent the position of the eccentric when set for running in the arrow's direction. A B in the left-hand diagram of Fig. 54 is, in fact, the line K E of the upper diagram in Fig. 53, and A B in the right-hand diagram (Fig. 54) is the line K F in the lower diagram (Fig. 53). On A B describe the polar valve circle. From B draw B D perpendicular to the horizontal E F, and mark off the lead D G. A G is therefore the amount of lap. Draw the lap circle

Fig. 54.

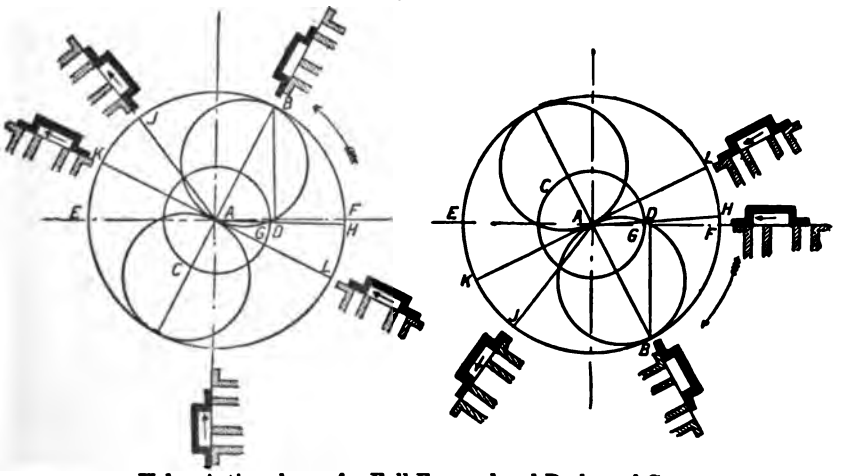

Valve Action shown for Full Forward and Backward Gear.

G C. Admission, cut-off, release, and compression are at A H, A J, A K, and A L respectively.

The inherent peculiarity of the Zeuner diagram is here seen. The *real* position of the crank relative to the eccentric's position A B, is A E; but the steam distribution is traced round in the direction indicated, as though the crank were *leading* the eccentric.

The state of things for any position of the eccentric between E and F (Fig. 53) can now be shown. K E and K F in Fig. 55 are in length and position equal to K E and K F of Fig. 53. Join E and F. The line E F represents the path of the eccentric sheave when being moved from one extreme position to the other.

* This matter has already been touched upon when dealing with crank-shaft governor gears.

Wherever the position of the eccentric may be, the line E F must terminate the radius of the eccentric throw, and, therefore, the line drawn for any intermediate position of the eccentric on the line E F, to the centre K, represents by its throw and position the radius and angle of the eccentric sheave; and if on that line produced, valve circles be drawn, the action of the steam is rendered clear. In the accompanying figure this has been done. Two intermediate points have been taken and numbered 1 and 2.

Fig. 55.

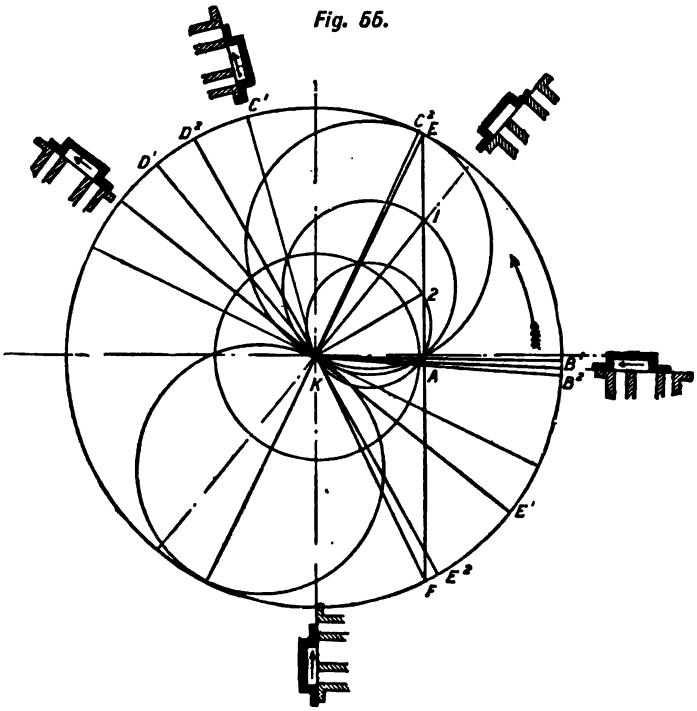

Valve Action shown for Position 1.

Admission, cut-off, release, and compression are at B^1, B^2; C^1, C^2; D^1, D^2; and E^1, E^2, respectively.

Tabulating these results, it appears that—

When the eccentric is at K 1	Admission is earlier Cut-off ,, Release ,, Compression ,,	than when the eccentric is at K E.
When the eccentric is at K 2	Admission is earlier Cut-off ,, Release ,, Compression ,,	than when the eccentric is at K 1.

It also appears from the diagram that, although admission is earlier as the eccentric approaches its neutral position K A, the lead is constant for all positions, because the cosine of the eccentric angle is constant. This is true, neglecting the angularity of the eccentric-rod, which is generally so small as to be quite inappreciable.

The line E F will be designated the characteristic line of the gear, and it will be shown that in certain forms of reversing gears it is a straight line, as in the present instance; and in others it has a curvature, sometimes towards the crank shaft, and sometimes towards the cylinder. The significance of the various forms will become apparent as the work proceeds. For the present it will suffice to say that when the characteristic line is straight and vertical, the lead is constant for all positions of the gear.

Stephenson's Link Motion.—Fig. 56 shows the well-known Stephenson or shifting link motion. A E is the throw and position

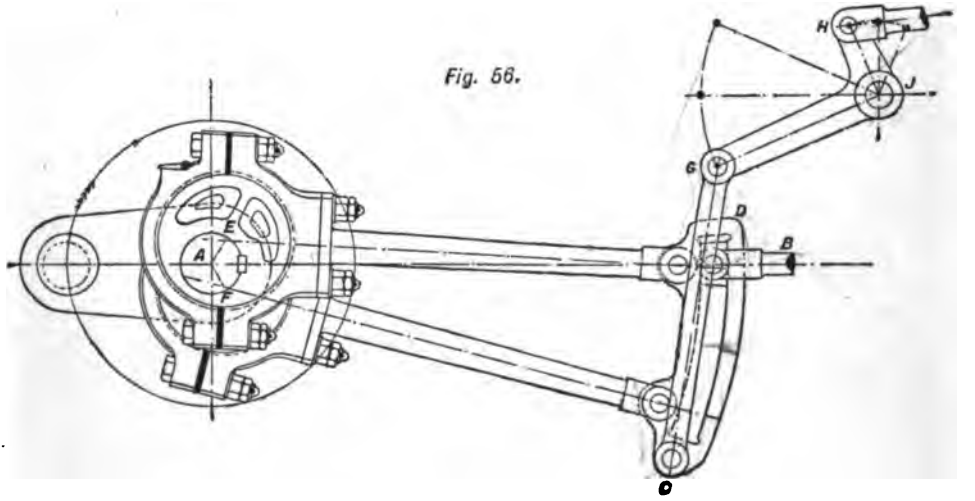

Stephenson Link Motion.

of the eccentric for running under, and A F the eccentric for running in the reverse direction. The link D C is curved with a radius equal to the length of the eccentric-rods,* and is concave to the crank shaft. The valve spindle B is coupled to the link D C in such a manner that the latter is capable of being raised or lowered

* When the length of the eccentric-rods is spoken of, it should be understood to denote the distance from the centre of the eccentric clips to the centre of the eccentric pin holes on the link, unless there is a direct statement to the contrary. Strictly speaking, the form of link shown in the figure has a radius greater than the length of the eccentric-rods, by the distance between the eccentric pin hole and the pin hole in the link block, when in full gear.

by the lifting link C G, which is in turn connected to the bell-crank lever G H, having J as a fulcrum. This lever may be operated by a reversing handle, a reversing wheel and screw gear, or by a small cylinder fitted for the special purpose. The latter arrangement constitutes what is known as a "steam reversing gear," and is most frequently seen on large winding engines.

In the diagram the eccentric A E has sole control of the valve, the action of which is similar to that of a valve connected to the eccentric A E in an ordinary manner. The crank, therefore, revolves in the direction indicated. The angle and throw of the eccentrics are determined by the construction of a diagram similar to that illustrated in Fig. 1. When the eccentric A F has control of the valve the action is practically the same, but the motion of the crank is reversed.

The action of the motion for full forward and full backward gear being understood, the question arises, what would be the action for any intermediate position of the link block?

Open and Crossed Rods.—Before dealing with this question, the meaning of the terms "open" and "crossed" rods should be

Fig. 57.

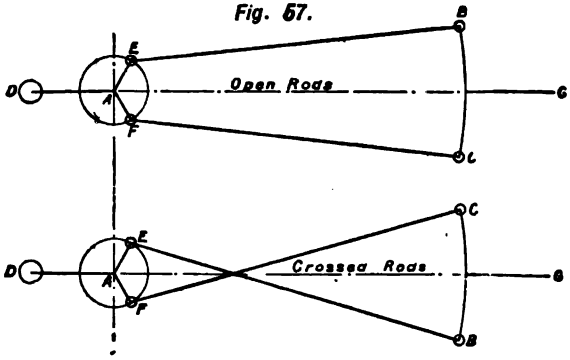

made clear. In Fig. 57 A E and A F are respectively the forward and backward eccentrics of a link motion driving a valve spindle G. In the upper figure the eccentric-rods are coupled to the link on the side on which are situated the respective centres of the eccentric sheaves, when the crank is on the outer dead centre. This arrangement constitutes an "open" rod link motion. In the lower figure the eccentrics are coupled as shown, thus forming what is known as a "crossed" rod link motion.

Valve Diagram for Stephenson's Link Motion.—Let A F and A E, Fig. 58, be the forward and backward eccentrics, respectively, of two link motions, whereof the upper diagram is an open, and the lower a crossed rod arrangement. B C is the link, and F C and E B are the eccentric-rods. On A F describe the valve circle, cutting the line A C, which is drawn from the extremity of the link C, to the centre of the crank shaft in G. From F through the point

G, draw the straight line F H, meeting the horizontal line A J in H. Through the three points E, H, and F draw an arc. This arc will be the characteristic line of the gear, and includes the extremities of all the virtual eccentric arms for any position of the block in the link. Take any position of the gear, and divide the line E F in the same proportion that the block divides the whole length of the link. Referring to the diagrams, let X be the point of gear chosen. It is required to find the movement of the valve corresponding to this particular position. On the characteristic line E F mark the point W so that F W bears the same proportion

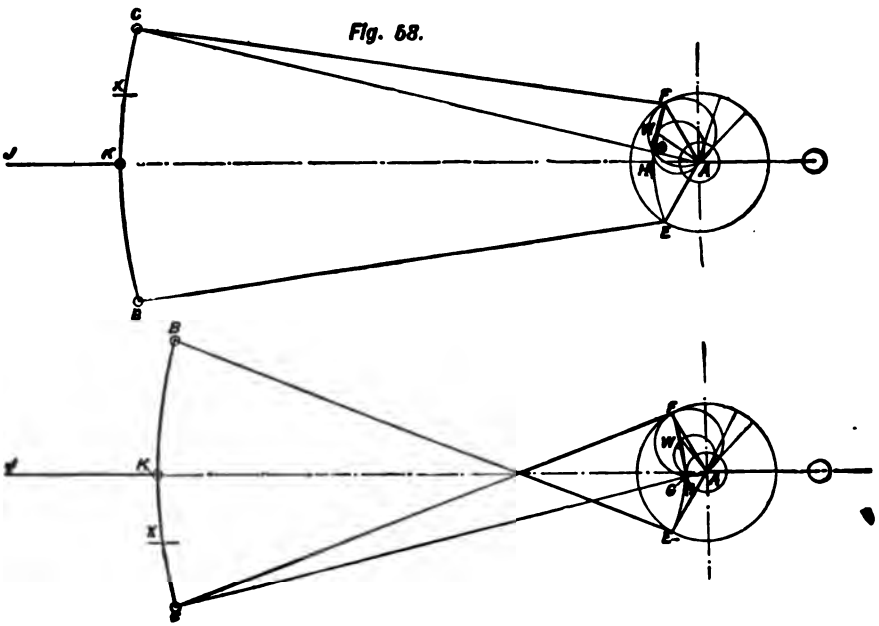

Valve Diagram for Stephenson's Link Motion.

to the line E F that X C bears to the whole length of the link C B. Join the points A and W. Then A W is the virtual eccentric arm which produces approximately the same valve movement that results from the combined action of the two eccentrics A E and A F, acting through the medium of the link B C. On A W as diameter draw the valve circle. The maximum port opening, the periods of admission, cut-off, release, and compression are now clearly seen; and by choosing other positions of the link and repeating the above construction the action for any other point is seen.

Consider the enlarged diagram for open rods, Fig. 59. The letters A, E, F, and H correspond with the letters of the previous diagrams;

and the characteristic line E F contains the extremities of all the virtual eccentric arms. The lap circle J K remains constant for all positions of the gear; the valve circles, however, are changed for every position of the gear, and cross the lap circle at different points, and, in the manner of the simple Zeuner diagram, indicate the percentages of admission and cut-off. The lead is also seen to vary for all positions of the link, a fact which explains that common statement that in the shifting link gear, with open rods, the lead increases as the gear is brought into mid-position; but with crossed rods, the reverse is the case.

It can be shown that these statements are correct from an inspection of Fig. 57. The motion for both open and crossed rods is shown in mid-gear; the crank in each case is on the outer dead point, and

Fig. 59.

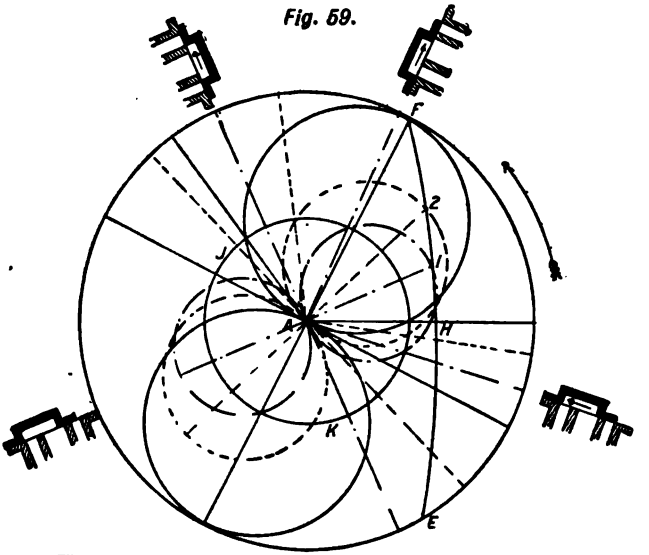

Valve Action shown for Link notched up to Position 1.

the port is open for lead. Suppose, in the case of the open-rod arrangement, the link B C moved so that the point B is brought to the centre line D G. The point B is constrained to move in an arc whose centre is E, and therefore the shifting of the link motion must pull the valve to the left, because E is fixed. This movement manifestly lessens the port opening and decreases the lead. Applying the same reasoning to the crossed rod gear, it is seen that the valve spindle moves to the right as the block in the link approaches full gear. Generally, the longer the eccentric-rods and the shorter the valve travel, the less will be the variation of lead. The truth of these statements is at once verified by a glance at the figure.

Macfarlane Gray's Method of Describing the Characteristic Line.—Macfarlane Gray has suggested a very

simple method of describing the line EF, which is as near the truth as practice demands. Describe with centre on A J produced (Fig. 58) an arc passing through E and F with radius found as follows:—

Radius = length of eccentric-rod from centre to centre × half the distance between the two eccentric sheaves ÷ the distance between the centres of the eccentric-rod pins on the link. Referred to Fig. 60, Radius $= \frac{DT \times DD'}{2TN}$.

For open rods the arc is concave to the shaft; for crossed rods concave to the link.

It is instructive to apply the two methods given above, to one case of link motion, and observe the closeness of their agreement.

Fig. 60.

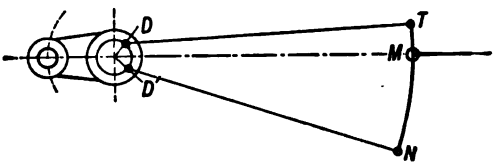

Link Motion "notched up."

The above constructions emphasize the advantage of keeping the eccentric throws short, the eccentric-rods long and the link short in order that the lead disturbance shall be a minimum. The first and third conditions are to be met by employing double-ported valves; and to keep the eccentric-rods long the link should be located as near the valve chest as circumstances permit.

At this point it may be well to explain that the diagrams just given are approximate only. When valves are operated directly from eccentrics, the movement can be predetermined with great exactitude, but with link motions it is not so. So many points step in to modify the valve movement, that to pre-arrange a link motion that shall satisfy all conditions is impossible. The best that can be done is to secure the best action for full forward and full backward gear, and then, with the link properly suspended, the eccentric-rods long, and the valve travel short in proportion, the action for intermediate gear will be almost exactly that shown by the characteristic line in the diagram, and will be found satisfactory.

Exact Diagram of Link Motion.—There is, however, a method whereby the valve movement can be determined exactly when the leading dimensions have been settled upon.

Let the accompanying diagram (Fig. 61) represent, in outline, a link motion in which it is desired to determine the exact movement of the link. Let A E and A F be the backward and forward eccentrics respectively, B C the link, and D G the suspension link, shown in position for mid-gear. Divide the eccentric circle E F into

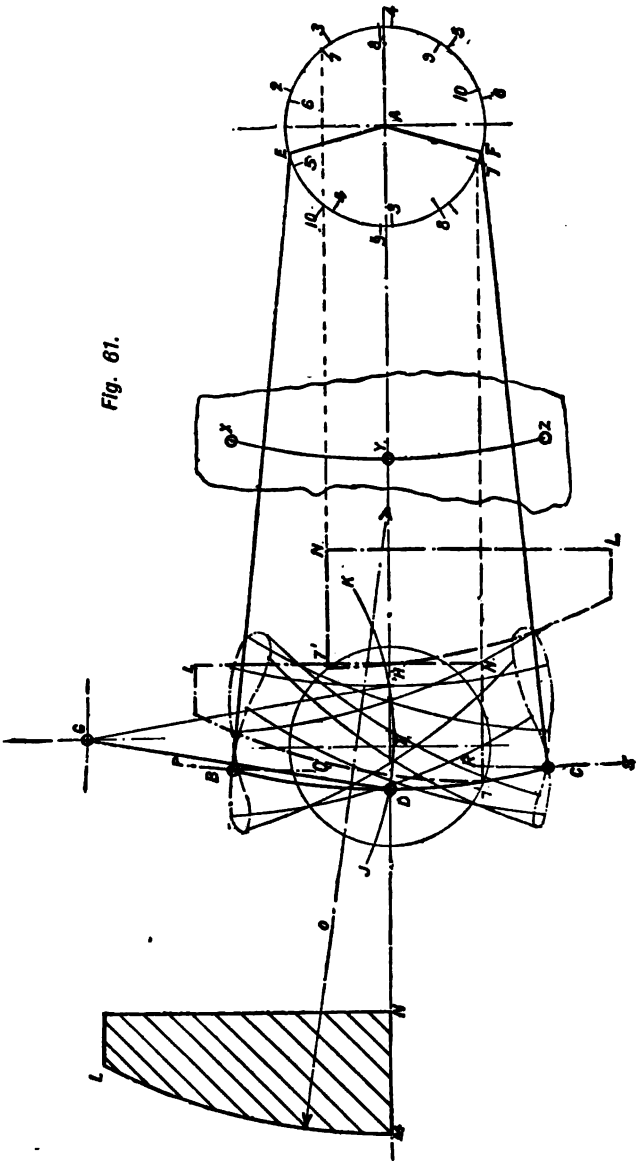

Fig. 61.

any number of equal parts, say ten, starting from the point E for the backward eccentric, and from F for the forward eccentric. (See Fig. 61). From E as centre, and with the length of the backward

eccentric as radius, describe an arc P Q; and from F as centre, and with the length of the forward eccentric as radius, describe an arc R S. Now it will be apparent that when the eccentrics are at A E and A F, the centre of one pin hole of the link must be somewhere on P Q, assuming that the link is of the double bar form, shortly to be described; and the centre of the other pin hole must be somewhere on R S; whilst the third point is somewhere on the arc J K, the path of the end of the suspension link.

Now prepare a tracing paper templet of the link, drawn to scale, marking thereon the position of the pin holes and the point of suspension. In the figure, such a templet is shown, X being the backward pin hole, Z the forward pin hole, and Y the suspension point. Applying this templet to the arcs P Q, R S, and J K, so that X is on P Q, Y on J K, and Z on R S, a definite position of the link is given, which can be pricked through to the paper below, and numbered to correspond with the eccentric circle. By repeating this process for all the other positions of the eccentrics, the point-path of the pin holes is tracked out, discovering the exact movements of these points. Taking the case of the present gear, the extreme horizontal points of the point D are seen to be D and H; and since the valve spindle is in the direction A D, its travel will be exactly equal to D H; and, further, since the link is in mid-gear, D H is equal to twice the lap *plus* twice the lead, so that either of these being known, the other is found. The peculiar paths of the pin holes are known as "slip curves," and indicate the amount of slotting motion of the die in the link.

The above method of tracing the valve motion is open to one objection, namely, that if the point-paths are to be drawn full size, the drawing must be as large as the whole gear itself, a condition which is usually inconvenient; but, by the method about to be described, the point-paths may be found without drawing the eccentric-rods in position.

In the figure, suppose the eccentric circle E F transposed to the left a distance A T = E B = F C; and let a templet L M N be prepared, having the radius O equal to A T, and the side M N in the direction of the radius. If this templet be applied to the transposed circle, so that the point M coincides with the chosen point in the circle, and the side M N is parallel to A D, the curved side L M contains the centre of the eccentric pin hole. The templet L M N being made of cardboard, or some other suitable material, the curve can be at once drawn on the paper. Similarly, placing the templet in position for the other eccentric, the curved side contains the centre of the other pin hole. Now, applying the link templet as before, so that each centre falls on the curves thus found, the link's position is discovered.* Referring to the figure,

* A valuable paper on "Point-Paths in Mechanisms, found by the use of the templet," appeared in *Engineering*, vol. lvii., p. 439. The use of a templet in this way is applicable to many forms of link-work, and is especially valuable when the mechanism is too large to admit of all parts being drawn in position.

the positions of the templet for backward and forward eccentrics, when the latter are at 7, 7, are shown by dotted lines.

The exact valve movement being thus determined, the results may be referred to an ellipse diagram, or, still better, to a crank pin diagram about to be described. The inequalities for backward and forward running, and for full and middle gear are then clearly shown.

Crank Pin Diagram.—In order to show the steam action for various positions of the link block it is convenient to construct a crank pin diagram giving the opening to steam, the point of

Fig. 62.

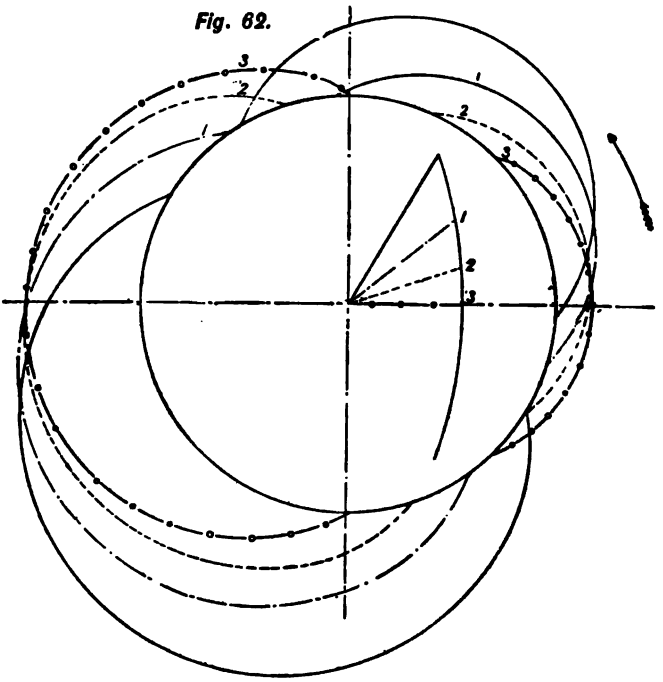

admission, and other events in the stroke referred to a circle representing the path of the crank pin. In the accompanying figure, the curves 1, 2, 3 give the steam distribution corresponding to the valve circles 1, 2, 3 of Fig. 59. From these curves it is clearly seen that as the gear is moved towards the central position, the admission is earlier, the port opening less, and the cut-off earlier. The case in point is one in which inside lap, either positive or negative, is absent. The construction of this diagram, although tedious, is a very simple matter. The Zeuner diagram being drawn, the port opening for any crank position is known, and if various points through the stroke be taken, and the port

openings for each of these positions marked from the crank-pin circle (not necessarily drawn to scale), curves are obtained similar to those shown in the figure. The crank-pin diagram illustrates the action, perhaps, clearer than any other; and it has been the practice of some engineers to have such a diagram plotted down for each gear made, and carefully preserved with the drawings of the engine. The peculiarities of the gear are thus graphically depicted; and should occasion arise to modify the valve motion, there is a true record of the existing conditions, and alterations can be made with confidence, knowing the exact state of matters with respect to the steam distribution.

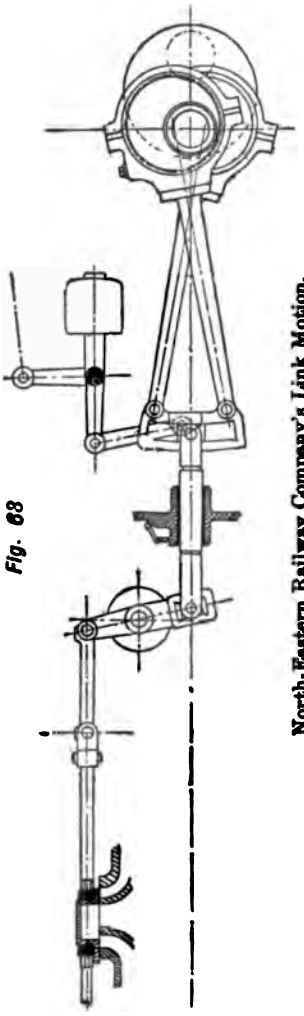

Fig. 63 North-Eastern Railway Company's Link Motion.

Best Arrangement of Gear.—In the shifting link motion, the point of suspension C, Fig. 56, may be at one extremity of the link as shown, or at a point midway between the eccentric-rod pin holes. The link for the former mode of suspension is of simpler construction than in the latter case. The suspension point, however, is often decided by the disposition of the adjacent parts of the engine. The central position, generally speaking, gives the easiest motion; but in many cases, notably in locomotives, suspension at this point would mean a very short lifting link, which is an objection. Another point requiring attention is that the arm of the lever G J is parallel to the valve spindle when the link is in mid-gear; and further, when the valve is central on the ports, the perpendicular from the point of suspension should bisect the versed sine of the arc described by the point G. The figure fulfils these conditions. Although not of vital importance, the arrangement just described is the best, and wherever possible should be adopted.

If any link gear be plotted down for various positions throughout the stroke, the centres of the pin holes in the link will be found to describe peculiar curves, which resemble the figure of an attenuated

eight. These are known as "slip curves," and by their breadth denote the slip of the block in the link. The aim of the designer should be to reduce this slip as much as possible, so that the wear of the link is a minimum.

Link Motion made by the North-Eastern Railway Company.—Fig. 63 shows the form of link motion employed by the North-Eastern Railway Company on their express passenger locomotives. The valve chest is on the top of the cylinder, and the valve spindle derives its motion from the rocking lever in the manner shown. The object of presenting this illustration is to show the effect of the rocking lever on the setting of the eccentrics. In ordinary cases the eccentrics would be set in advance of the crank; but here they follow it, and have a position directly opposite the true setting for a link motion of the ordinary type.

The Slot Link.—The ordinary form of slot link is illustrated in Fig. 64.* The point of suspension is on the side remote from the

Fig. 64.

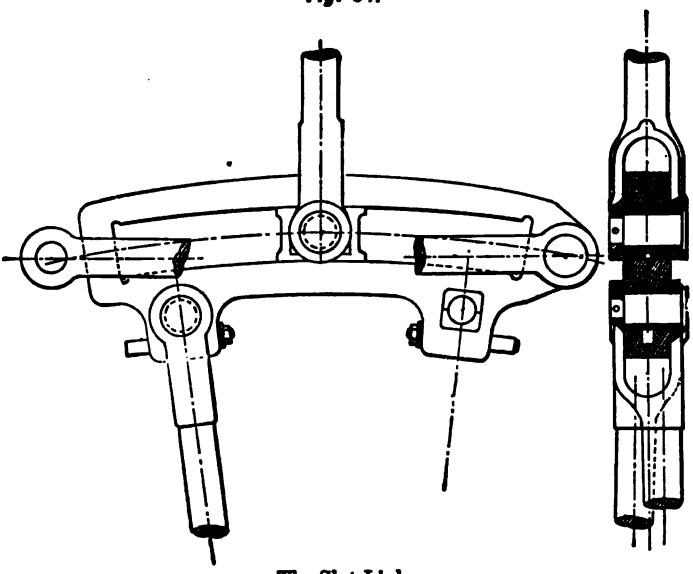

The Slot Link.

weigh-shaft. This form of link is very simple, and is much used for small engines. Its chief drawback is that no adjustment of the link block is possible; consequently any wear thereof causes considerable jar on the gear.

The Double-Bar Link with Eccentric-Rods Inside.—The next form is the double-bar link with eccentric-rods inside.

* The three drawings of links shown are taken from Seaton's *Manual of Marine Engineering*: Charles Griffin & Co., Limited.

The defect of the common slot link is avoided, but this advantage scarcely compensates for the defect introduced. The link cannot

Fig. 65.

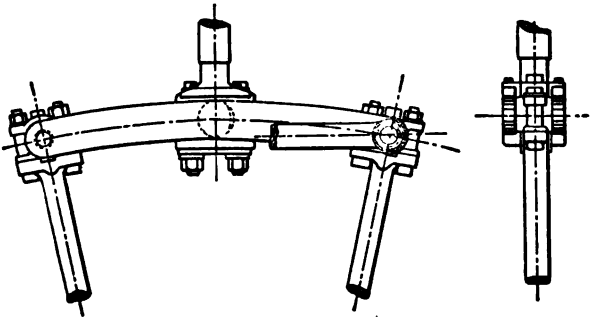

Double-Bar Link with Rods Inside.

be moved so that the end of the valve spindle is opposite the eccentric pin holes, and therefore the throw of the eccentrics must be greater than half the valve travel when set full gear. This is a disadvantage, since it incurs larger eccentrics, and, as a consequence, increased friction. The link itself is also considerably lengthened.

The Double-Bar Link with Eccentric-Rods Outside.—The double-bar link with rods outside is the best form, but the most expensive. The eccentric-rods are here forked, and embrace

Fig. 66.

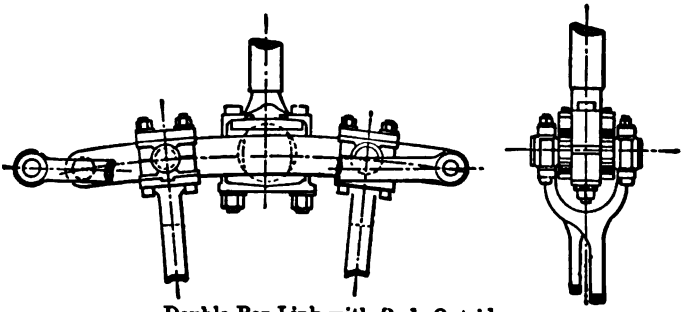

Double-Bar Link with Rods Outside.

the link, thus allowing either eccentric pin hole to be brought opposite the valve spindle. The suspension point is at one extremity of the link, but, if desirable, could easily be in the centre. The above form is largely adopted in the Navy and Mercantile Marine.

Seaton, in his *Manual of Marine Engineering*, has given rules for proportioning the various details of link motion, which are of great practical value (Chapter xiii.).

Proportions of Links.—For the slot link, let D be the diameter of the valve spindle; then

Diameter of block-pin when overhung	=D.
Diameter of block-pin when secured at both ends	=0·75D.
Diameter of eccentric-rod pins	=0·7D.
Diameter of suspension-rod pins	=0·55D.
Diameter of suspension-rod pin when overhung	=0·75D.
Breadth of link	=0·8 to 0·9D.
Length of block	=1·6 to 1·8D.
Thickness of bars of link at middle	=0·7D.
If a single suspension-rod of round section, its diameter	=0·7D.
If two suspension-rods of round section, their diameter	=0·55D.

Distance from centre to centre of eccentric-rod pin holes not less than two and a-half times the travel of the valve when in full gear, and when space permits, two and three-quarters to three times.

The unit D is obtained from the expression

$$D=\sqrt{\frac{L\times B\times p}{F}};$$

Where L = length of valve in inches.
B = breadth of valve in inches.
p = maximum absolute pressure to which valve is exposed, in pounds per square inch.
F = a factor having the following values under various circumstances:—

When the spindle is long and of iron F = 10,000.
When the spindle is long and of steel F = 12,000.
When the spindle is short and of iron F = 12,000.
When the spindle is short and of steel F = 14,500.

For the double-bar link with rods inside let D = diameter of valve spindle, as before.

Depth of bars	=1·25D + $\frac{3}{4}$ inch.
Thickness of bars	=0·5D + $\frac{1}{4}$ inch.
Length of sliding block	=2·5 to 3D.
Diameter of eccentric-rod pins	=0·8D + $\frac{1}{4}$ inch.
Diameter of centre of sliding block	=1·3D.

Distance from centre to centre of eccentric-rod pin holes three to four times full travel of eccentric-rods.

In the double-bar link with rods outside, D = diameter of valve spindle.

Depth of bars	=1·25D + $\frac{1}{2}$ inch.
Thickness of bars	=0·5D + $\frac{1}{4}$ inch.
Length of sliding block	=2·5 to 3D.
Diameter of eccentric-rod pins	=0·75D.

Distance between eccentric-rod pin holes two and a-half to two and three-quarter times the full travel of the valve.

Gooch's Link Motion.—The stationary-link gear, introduced by Sir Daniel Gooch, consists of two eccentrics A E and A F coupled to the link B C by eccentric-rods E B and F C. The link is curved towards the cylinder with a radius equal to the length of

the radius-rod B D; which latter is raised or lowered by means of the litting link G H. Finally, the link B C is sustained or sus-

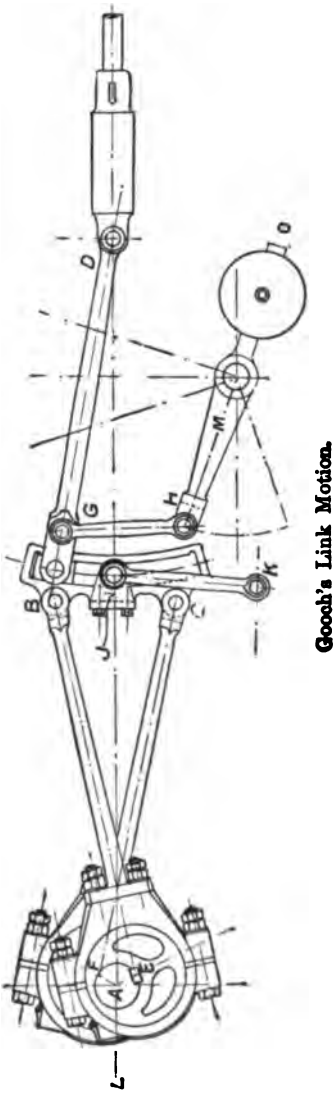

Fig 67. Gooch's Link Motion.

pended by a link J K; K being a fixed centre of motion. Compared with the Stephenson gear, the present arrangement has more joints, and occupies a greater length; but these objections are

compensated in some degree by the improved valve movement, whereby the lead is constant for all positions of the radius-rod. That such is the case will be apparent from an inspection of the figure. The crank A L is supposed to be on the outer dead centre, and when in this position, the valve, if correctly set, gives the desired amount of lead. Now, since the link has a radius equal to the length of the radius-rod, and because the eccentric-rods being of equal length, the link is vertical, it follows that B D can be swept through the whole length of the link without altering the position of D; and since the valve spindle is stationary, the lead is unaltered.

It remains to find the characteristic line of the gear; and, having obtained this, to determine the action for full forward or full backward gear, or for any intermediate position.

Eccentrics Driving Obliquely.—Before entering on this matter it is necessary to investigate the action of an eccentric

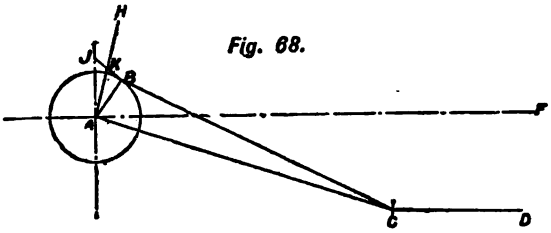

Fig. 68.

driving a valve spindle in an oblique direction. Let A B (Fig. 68) be an eccentric, and B C an eccentric-rod driving a valve-rod C D in a horizontal direction. Draw the straight line A C connecting the centre line of the crank shaft and the end of the eccentric-rod. This line makes an angle C A F with the horizontal line A F. Draw the line A H, making angle B A H equal to angle C A F. At right angles to B A draw B J, intersecting the line A H at K. Then A K is the throw and position of an eccentric, which, driving the valve spindle directly, would give approximately the same steam distribution as an eccentric A B driving the valve spindle obliquely. The foregoing construction, although not admitting of

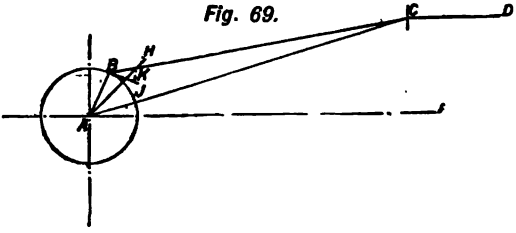

Fig. 69.

exact mathematical proof, is so very near absolute truth as to be quite satisfactory for all practical purposes.

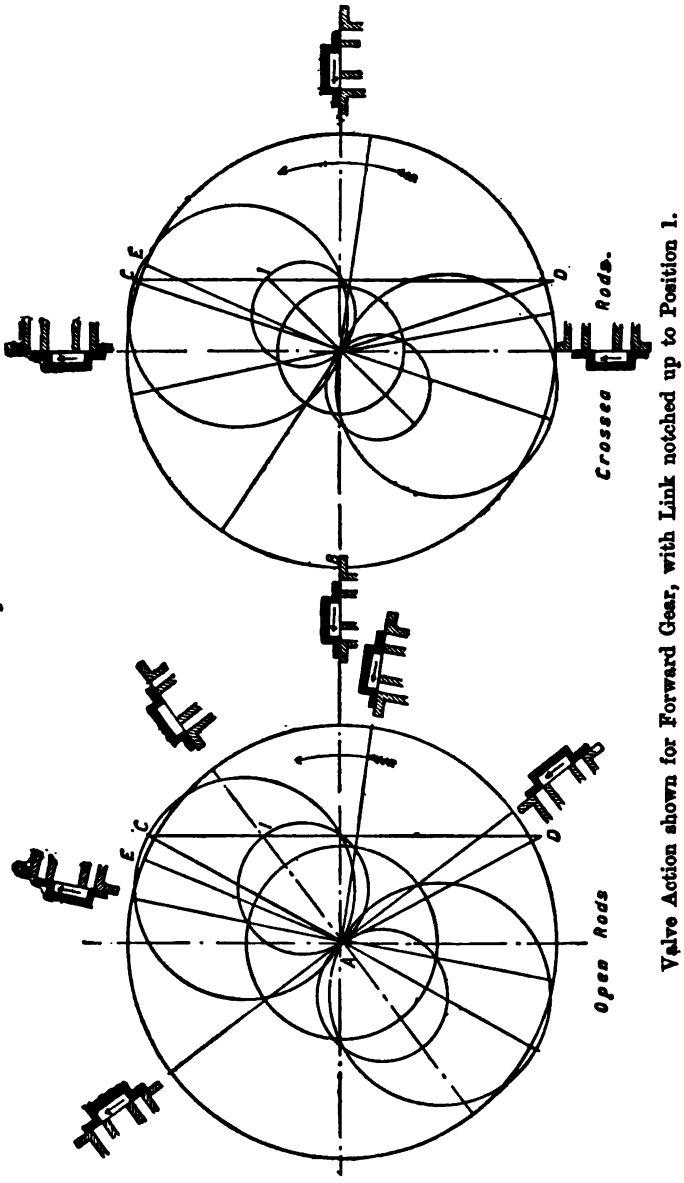

Fig. 70.

Valve Action shown for Forward Gear, with Link notched up to Position 1.

In Fig. 69 consider the eccentric A B driving the valve spindle in the manner shown. Join A C, and make angle B A H equal to angle C A F. Draw B J perpendicular to B A, cutting the line A H at K. Then A K is the throw and position of an imaginary eccentric, which, driving the valve-rod directly, would give approximately the same action as A B driving it in an oblique manner.

Valve Diagram for Gooch's Link Motion.—In Fig. 70 let A E represent the throw and position of one of the eccentrics in a stationary link motion, in relation to the real position of the crank A B. Make A C equal to the throw and position of the virtual

Fig. 71.

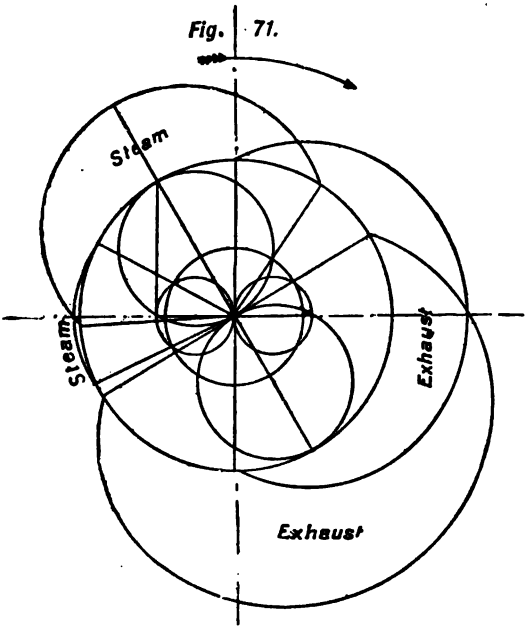

eccentric arm, obtained in the manner just explained. Draw the vertical C D, which is the characteristic line of the gear, and contains the extremities of the virtual eccentric arms for all positions. By dividing the line C D in the same proportion that the block divides the link, the equivalent eccentric for that position is obtained, and the valve action for that particular position can be shown by Zeuner circles. In the figure several positions have been taken, and the points of admission, cut-off, &c., clearly indicated.

Crank-Pin Diagram.—In figure 71 a crank-pin diagram has been constructed, for full and mid gear, showing, as the characteristic line indicates, a constant lead for both grades of cut-off.

Best Arrangement of Gear.—The stationary link is more sensitive to the point of suspension than the shifting link, and unless there are strong reasons for not doing so, the point of suspension should be placed in the arc of the centre line of the link, and midway between the eccentric pin holes. The correct horizontal position of K is somewhere on a vertical line which bisects the arc described by the central point of the link, J—an arc whose length is equal to twice the lap *plus* twice the lead. Finally, the link J K should be as long as convenient. The above conditions have been carried out in the design shown by Fig. 67. It is difficult to explain why these positions are the best; but plotting down the slip curves for various points of suspension will clearly show that they are.

As to the point G (Fig. 67), it should be as near the link as possible, in order to keep down the slotting action. The intermediate link-work between G and the reversing handle M N is necessarily one of convenience, the aim being to move the block of the radius-rod its full extent by a suitable movement of the handle on the reversing lever. To arrange for a movement of from 2 feet 3 inches to 2 feet 9 inches is a common allowance. When reversal is effected by a hand wheel and screw thread, as is common in locomotives and marine work, the mechanical advantage between the wheel and the lifting link is not restricted in any way. To balance the weight of the radius-rod and lifting link, the lever H M is made double ended, and carries a balance weight on the arm M O.

The proportions of the Stephenson link given on a previous page apply equally to the Gooch link gear, and can be relied upon giving good results.

Allan's Straight Link Motion.—The Allan straight link motion is obviously a combination of the shifting and stationary link gears. In the present arrangement the link and radius-rod are moved in opposite directions. The eccentric-rods may be open or crossed. With open rods the lead of the valve increases as the link is brought into mid-gear; but with crossed rods the reverse is the case. It will be shown, however, that this variation is somewhat less than in the shifting link with the same length of rods; but as the Allan gear occupies more length than the former, the eccentric-rods are generally shorter; so that finally, the lead variation is little less than with the common form. The two extra joints introduced are an objection; and altogether it is difficult to see that the straight link gear is an improvement on its predecessors. This much, however, may be said; the movement of the link and radius-rod being in opposite directions, the vibration of these parts between extreme positions is less; and, therefore, in confined situations its use may be desirable. Another point in its favour is the straight link, which is somewhat easier to construct than a curved one.

In the skeleton diagram, Fig. 72, A E and A F are the eccentrics relative to the real position of the crank A L. B C is the straight

link connected to the eccentric-rods. The link is supported from a point central between the two pin holes, by the lifting link D G. This rod in turn is centred upon one end of a double-armed lever

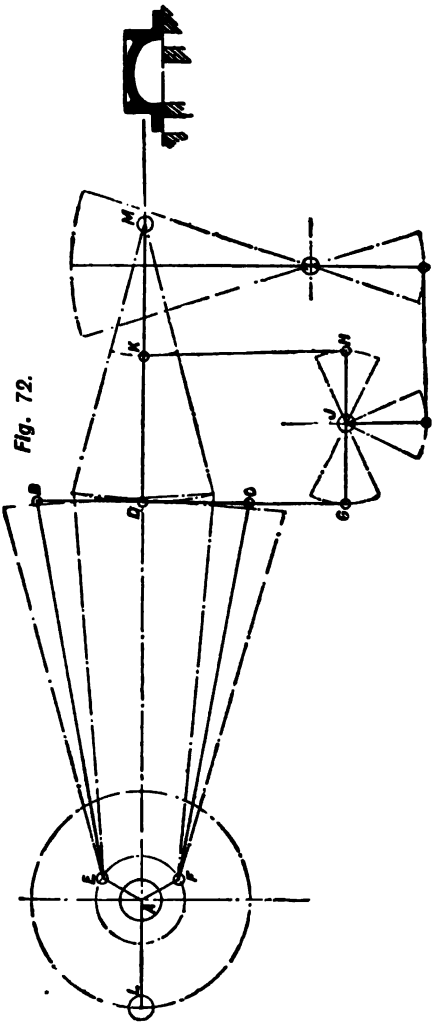

Fig. 72.

C H having J for a fulcrum. H K is the radius-rod lifting link moving B M in an opposite direction to B C.

In raising the link from mid position to full gear the movement is less than would be the case for the shifting link, as said, and the

inequality of lead is approximately that which would result by moving the link of a Stephenson gear, having the same length of eccentric-rods, in amount equal to the distance moved by the Allan link. In the shifting link, it has already been shown that the lead variation increases as the movement of the link, so that the reason of the variation being less with Allan gear will be understood.

Diagram for Allan's Gear.—The location of the centre of the weigh-shaft J is an important matter. In the following diagram, Fig. 73, A is the centre of the crank shaft, and B C is the link. From A as centre, and with A B as radius, describe the arc B L; and from M as centre, and with M D as radius, draw the arc D N intersecting B L in N. Join A N and M N. The point N indicates the position of the ends of the eccentric- and radius-rods when in

Fig. 78.

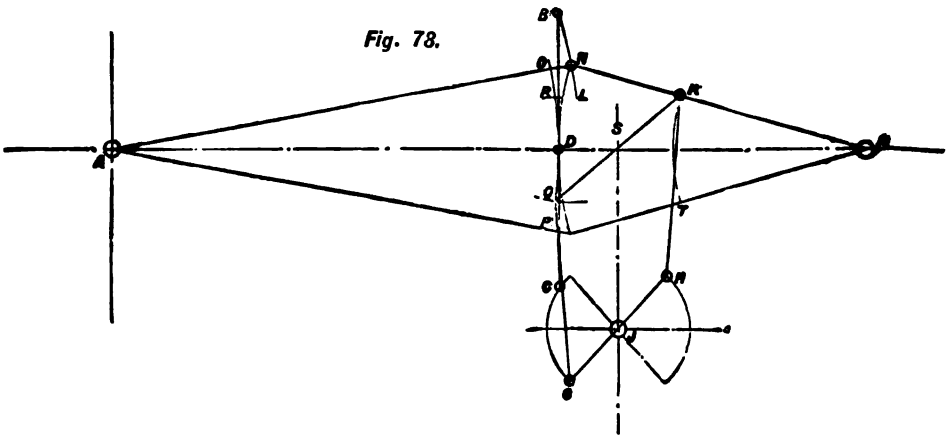

full gear. Fix upon the suspension point K, in the radius-rod; and from M as centre and with radius K M describe the arc. From A as centre, and with radius A D, describe arc O P. With centre N, and radius equal to half the distance between the pin holes in link (D B = D C, in the figure), cut the arc O P in Q. Join K and Q. The line K Q crosses the centre line A M at S; and a vertical from S contains the proper centre of the weigh-shaft. Let the vertical position of the shaft be fixed upon, and lettered J. Then the double-armed lever G H should be designed so that the bisection of the versed sines of the arcs described by the extremities of G H are vertical with the bisection of the versed sines of arcs Q R and K T.

The above construction is not imperative, but it is the one that gives the easiest running. Sometimes the point of suspension of the radius-rod is on the opposite side of the link to that shown above, the radius-rod extending past the link B C to accommodate

the lifting levers; and sometimes the link is slung from above, the point of suspension being at the lower end of the link.

Expansion Gears and Link Motions Combined.—When expansion gear is employed in conjunction with link motion, the position of the expansion eccentric must be directly opposite the crank, if similar action for forward and backward running is desired.

CHAPTER IV.

OTHER REVERSING GEARS.

CONTENTS.—Principle of Radial Gears—Joy's Valve Gear—Diagram for setting out Joy's Valve Gear—Joy's Gear on Marine Engine—Hackworth's Valve Gear—Bremme's Valve Gear—Practical Example of Bremme's Gear—Comparison of Joy's and Bremme's Gear—Walchaërt's Gear.

THE desire to save the space taken by eccentrics on the crank shaft of locomotive and marine engines, and to bring the steam chests into a more accessible position, has caused engineers to seek for other methods of reversing, and the effort has evolved several well-known forms of link-work for actuating the valve, to which the name Radial Valve Gear is given.

Principle of Radial Gears.—The general principle of radial gears is that of obtaining from some reciprocating or revolving piece of the engine, an arrangement of link-work, a point in which shall describe an oval curve, and by altering the direction of the axes of this curve, to produce reversal, variable expansion, or stoppage.

Joy's Valve Gear.—Of radial gears, the Joy valve motion is perhaps the best known. At a suitable point D in the connecting-rod (Fig. 74), the link B is connected, its lower extremity being guided by an anchor link C, which has E for a fulcrum; E being carried from a suitable part of the engine frame. The link F is guided in a curved slot G, which, together with the movement derived from B, constrains the point H to move in an oval curve. The valve-rod J is connected to the extremity H, and imparts motion to the valve. Plotting down the paths of D, K, and H will discover that these points move in paths similar to the dotted curves shown in the figure. Now the crank being on the outer dead centre, as shown, and the curved slot G being vertical, it will be understood that if the total breadth of the curve described by H be equal to twice the lap *plus* twice the lead, the valve will simply move to and fro on the port face, opening each port alternately by the amount of lead. This will be the action for mid-gear. Now suppose the angle of the curved slot altered to L L. The path described by H will still be of the same form, but altered in position; and because of this altered position will impart an increased travel to the valve. Again, suppose the slot moved the

same angle on the other side of its vertical position. The valve now has the same travel as before; but, because of the altered angle of the guide, the valve's motion will commence in the opposite direction, thus reversing the engine. It will also be understood that by giving any intermediate position to the slot between the

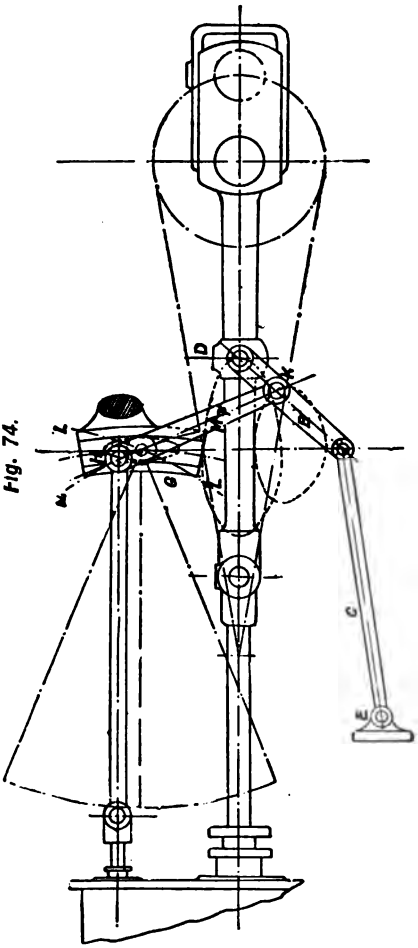

Fig. 74. Joy's Valve Gear

central point and L L, the valve travel is proportionally increased or decreased, as the case may be, thus varying the point of cut-off; and that any intermediate position between the central line and M M will also produce a variation of cut-off; but the motion will be in the reverse direction to that caused by having the slot inclined on the other side of the vertical.

The correct method of laying down the various centres of the Joy gear is set forth in a pamphlet issued by the late David Joy, the inventor. The method is as follows :—

Diagram for Setting out Joy's Valve Gear.—On the connecting-rod A B, take a point C, so that its total vertical vibration D D^1 is not less than twice the full valve travel, preferably a little more.* Through D D^1 draw X X perpendicular to the horizontal A B; and at the proper distance from A B lay down the centre line of the valve spindle. Mark the extreme position of the point C for inner and outer dead centres; and choose such a lever C E whose total angle of vibration C E C^1 does not exceed 90°; and carry the end E by an anchor link E F, the mid position of which is parallel to the connecting-rod when horizontal.

Next, on the centre line of the valve spindle produced, and on each side of the vertical X X, mark off the points J J′ each distant from the vertical by an amount equal to lap and lead. From the point J draw a line J H, the centre line of a link that, by virtue of its connection to C E, will move the point K—the point where J H crosses the vertical—equally on each side of the central point K. The point K is the centre of oscillation of the curved guides in which slide the blocks carrying the fulcrum M of the lever J H. The position of H is best found by a tentative process; and to test whether the chosen point be a correct one, the equal vibration required is marked off on each side of K, and lettered L L. The distance L L is equal to the vertical vibration of the point *c* on the connecting-rod, that is, D D′. From D as centre, and with C H as radius, mark the point M in the vertical X X; and with the same radius mark off N from D′. M and N are the positions of H when the engine is at half stroke, or thereabouts, and these points give the total vertical vibration of H. From M as centre, and with H K as radius, describe an arc cutting the vertical X X; and from N as centre, and with the same radius describe an arc also cutting the vertical X X. Then, if the point H be the correct one, the arcs just drawn cut the vertical X X at L and L. Should the points of intersection fall *below* L and L, the point H is too near E; but if they fall *above* L and L, H is too near C. The exact position of H is generally found on a second trial.

The valve-rod J G may be of any convenient length, but the centre line of the slides must be struck with the same radius. From the point K draw a line K O parallel to A B; and with centre on this line, and with J G as radius, describe an arc containing K, and cutting the curves L L, struck from K as centre, in P P′. From P or P′, and on each side thereof, mark off on the arcs L L an amount equal to one and a quarter times the maximum port opening required, and let R R′ be the points. With centres on the arc S S struck from centre K, describe arcs passing through K R and

* The port opening being determined, the desired point of cut-off, and the lead being known, it is possible to estimate the requisite travel by diagram 1 or 5, pp. 3 and 9.

K R′. These arcs represent the centre lines of the curved slots for forward and backward gear, and when the latter are in either of these positions the point of cut-off is about 75 per cent. Should a

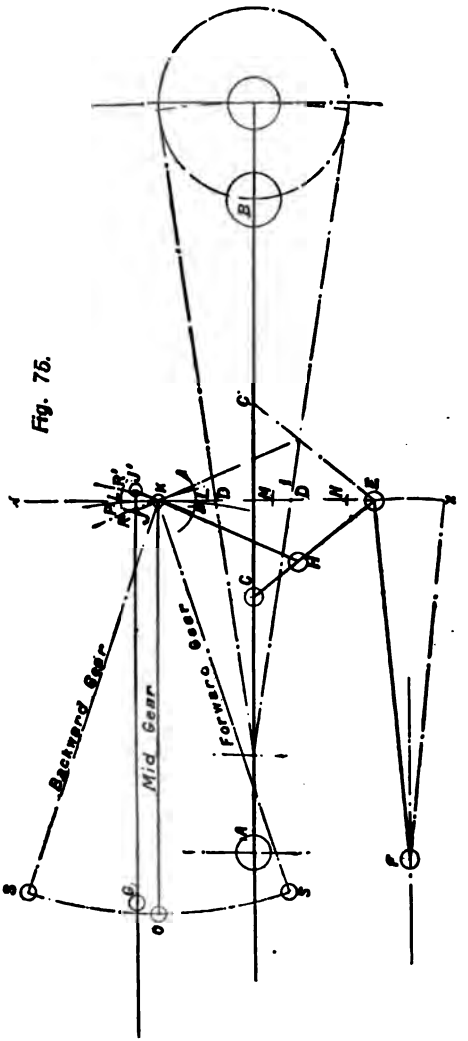

later cut-off be desired, the slots must be carried still further from their vertical position.

Glancing at the diagram, it will be seen that the fulcrum K of the lever J H coincides with the centre of oscillation of the curved

slots or guides when the crank is on either dead centre. It is evident that when these points coincide the angle of the guide can be altered to any extent without disturbing any other part of the mechanism, a state of things which shows that the lead is constant for all positions of the reversing handle.

The inventor's pamphlet goes on to say that when the above directions are followed, the leads and cut-offs for each end of the cylinder, for backward and forward gear, are practically equal.

The arrangement of the gear as just described is the most effective, but considerable latitude is permissible. For instance,

Fig. 76.

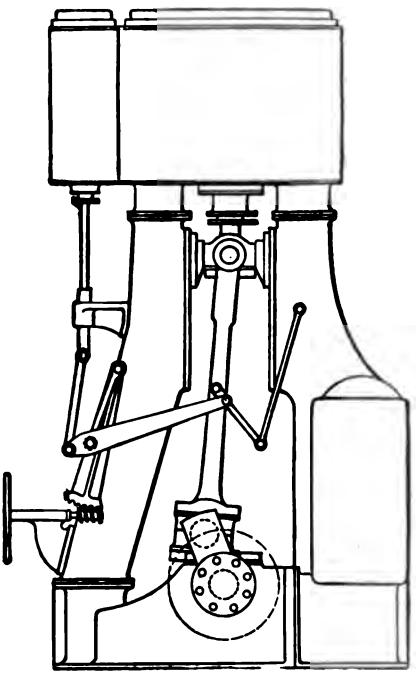

Joy's Valve Gear applied to Marine Engines.

the point C can be placed above or below the centre line of the connecting-rod, and the point K can be raised or lowered, so that the line K O is no longer parallel to A B; but it is not advisable that the line should have a greater inclination to A B than 4°, or thereabouts. Again, the anchor link may be dispensed with, the point J being guided in a slide affixed to some convenient part of the engine.

For vertical engines the same rules apply by placing the diagram vertically, and altering relatively the terms "vertical" and "horizontal."

The valve motion arising from the link-work of this gear is superior to the ordinary eccentric motion. If the movement of the parts be traced round for a complete revolution of the crank, it will be found that when opening and closing the steam ports the valve travels rapidly; but during expansion and exhaust the movement is slow. Another advantage, in the case of locomotives, is the space saved on the crank shaft, due to the absence of eccentrics, whereby longer journals and crank pins are obtainable.

Joy's Gear on Marine Engine.—As an example of the gear applied to a marine engine, the annexed figure (76) from Seaton's *Manual* is presented. The reversing wheel actuating the worm gearing with the toothed sector is clearly shown. The curved guide is here dispensed with, the end of the reversing sector carrying a lever which has the same function.

Hackworth's Valve Gear.—Hackworth's Valve Gear, shown diagrammatically in Fig. 77, consists of an eccentric A B placed

Fig. 77.

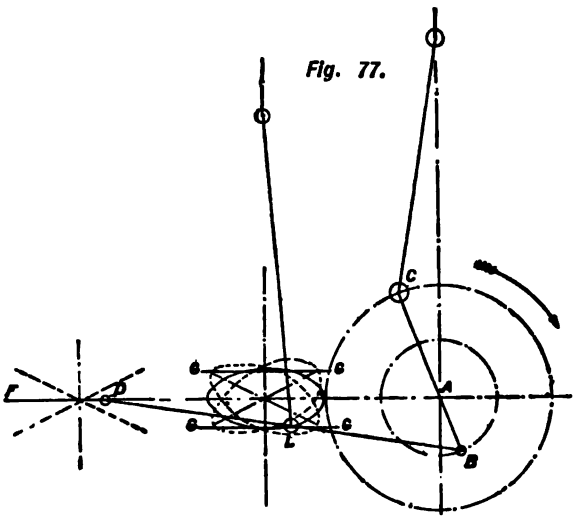

Hackworth's Valve Gear.

directly opposite the crank A C, actuating the eccentric-rod B D, the extremity of which is constrained to move in a straight guide F, the angle of which can be varied similarly to the guide of the Joy gear. A point L in the eccentric-rod is employed to give the valve movement. It will be seen that when the position of the guide is horizontal, the point L will describe an oval curve, whose major axes is parallel to F. When the direction of the guide is altered the axes of the curve vary correspondingly, and the motion imparted to the valve is increased. The gear is so set out that when the crank is on dead centre the point D coincides with the

centre of oscillation of F. It is clear, therefore, that F can be pulled over in any direction without disturbing the lead.

The paths of L corresponding to the three positions of the guide F are shown. Let the horizontal G G be drawn on each side of the horizontal A B, and removed from it a distance equal to the outside lap. The port opening for each position will then be indicated; and from the figure it appears that when the slot is horizontal, the maximum port opening is only equal to the lead.

By tracing the gear round through a complete revolution it will be found that the valve acts most efficiently, having a rapid motion when opening and shutting, but during the closed periods the motion is somewhat slow.

Bremme's Valve Gear.—In the Bremme Gear an intermediate point of the eccentric-rod moves in a curved path instead of a straight line, and the point of attachment of the valve lever is at the extremity of the rod. Fig. 78 will render the action clear.

Diagram of Bremme's Gear.—The eccentric A B, whose position coincides with the crank A C, actuates the eccentric-rod

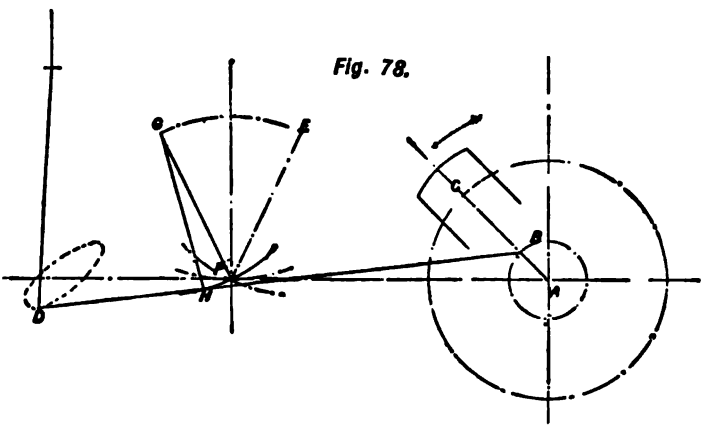

Bremme's Valve Gear.

B D, which, at a point H, is constrained to move in an arc having a radius equal to the suspension lever G H, and a centre at G. When the lever G H has the position shown, the crank revolves in the direction indicated. Now let the reversing lever G F, having a fulcrum at F, and the same length as G H, be pulled over to E. The point G of the lever G H now coincides with E, and the arc in which H is constrained to move has its centre at E. This changes the direction of the axis of the oval curve described by D, and consequently produces reversal of the engine.

As in the gears already described, the mechanism is so set out that the guided point of the eccentric-rod coincides with the centre

of oscillation of the reversing lever each time the crank is on the dead centre, thus producing equal leads. The angle of the reversing lever G F from the central line, and known as the "deviation" angle, should, the inventor states, never exceed 25° on either side.

The fact of the point H moving in an arc produces inequality in the valve's motion on each side of its central position, which causes cut-off and compression to fall earlier in the down than in the up stroke; but so far from this being an objection, it is an advantage, for the increased compression serves to neutralise the downward momentum of the piston-rod and connecting-rod.

Fig. 79.

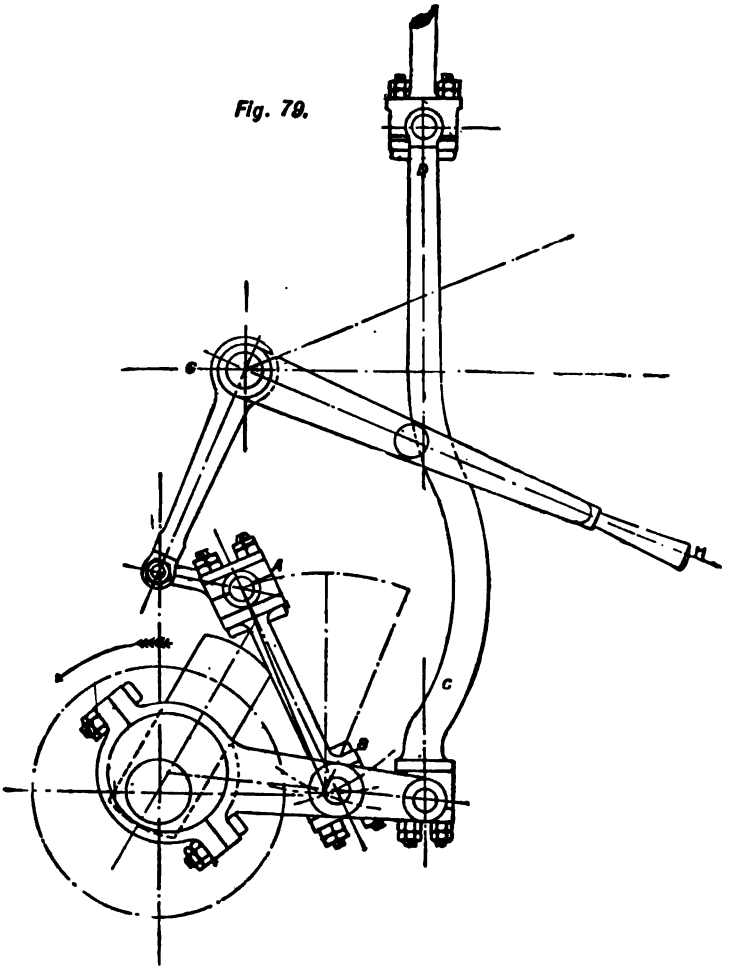

Bremme's Valve Gear applied to Vertical Marine Engines.

Practical Example of Bremme's Gear.—Fig. 79 shows a form of the Bremme gear in its practical application to vertical marine engines. The reversing handle G H moves the reversing arm by means of a wiper rod and short drag link. The suspension-rod A B is slung from the extremity of the reversing arm, and carries the eccentric-rod at its lower end. In the figure the reversing arm has been purposely omitted in order to avoid confusion with the suspension-rod A B. The centre line of the former, however, is drawn, and also its extreme position on the other side of the vertical, the total angle of deviation in this instance being 40°. The valve-rod C D and the reversing handle are in front of the engine, the latter being locked in any position by an arrangement carried on one of the engine stanchions.

Comparison of Joy's and Bremme's Gear.—Comparing the merits of the Joy and Bremme gears, it would appear that for locomôtives the Joy gear is to be preferred; but Bremme's gear is the best adapted for marine work. It would be somewhat difficult to arrange the Bremme gear with its eccentric-rod and reversing arm underneath the locomotive boiler, so as to be compact and clear the various parts. In marine work, however, the case is different. Here the space for the eccentric-rod and levers is usually abundant, and the reversing lever can be conveniently situated. The movement of the parts of the Bremme gear is considerably less than that of the parts of its rival, and this is a consideration in the engine room of a steamship where space is limited, and where it is necessary for the attendants to be in close proximity to the working parts.

Walchaërt's Gear.—This valve gear is extensively used on Continental locomotives with outside cylinders, and has been employed in England for small self-contained hauling engines, where it forms a convenient and compact gear. It has also been used occasionally for marine engines.

Referring to the diagram (Fig. 80), the pin A which actuates the link-rod is placed at such an angle to the crank that when the latter is on dead centre the reversing link is in its central position. The link is centred at B, and the radius-rod C is connected to the valve spindle in the manner shown. The valve spindle also receives a supplementary motion from the crosshead through the links D and E. Without this supplementary motion the gear would only be suitable for a valve having neither lap nor lead, and would only give the proper valve action at full forward or backward gear. Assuming the piston to be at the end of the stroke the pin A will be at half stroke, consequently the links D and E must throw the valve spindle over by an amount equal to lap plus lead. This consideration will determine the proportion of the lengths F and G; and the following conditions must be satisfied—

$$F : G :: 2(\text{lap} + \text{lead}) : \text{stroke of engine.}$$

The best action is obtained when the link is suspended from the

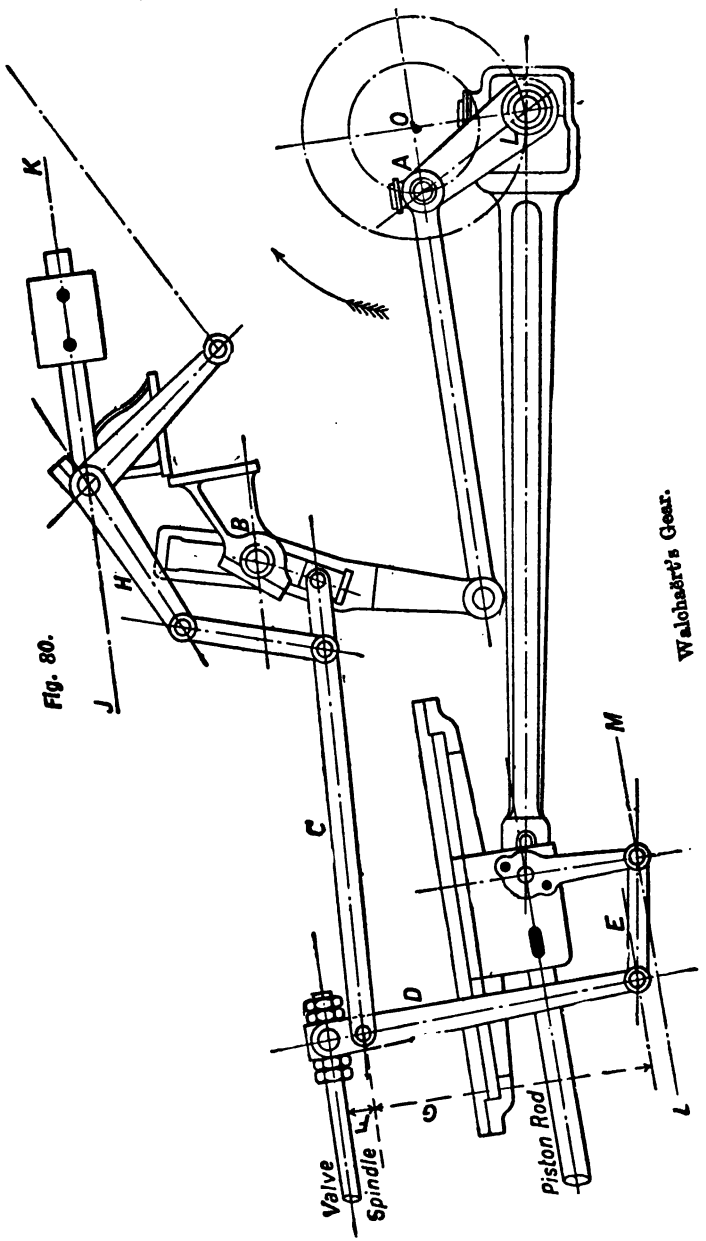

Fig. 80. Walchaert's Gear.

centre, as shown, and the suspension-rod is as long as possible. The point of suspension for the radius-rod should be as near the link as possible. When these conditions are observed the slotting action is a minimum.

The distance of A from the centre of the crank shaft depends on the position of the point of attachment of the link-rod to the link; but the motion received by the radius-rod from the point A must equal

$$T - \frac{T \times F}{G + F}.$$

Where T = full travel of valve.
F and G = lengths of arms of lever D.

Fig. 81.

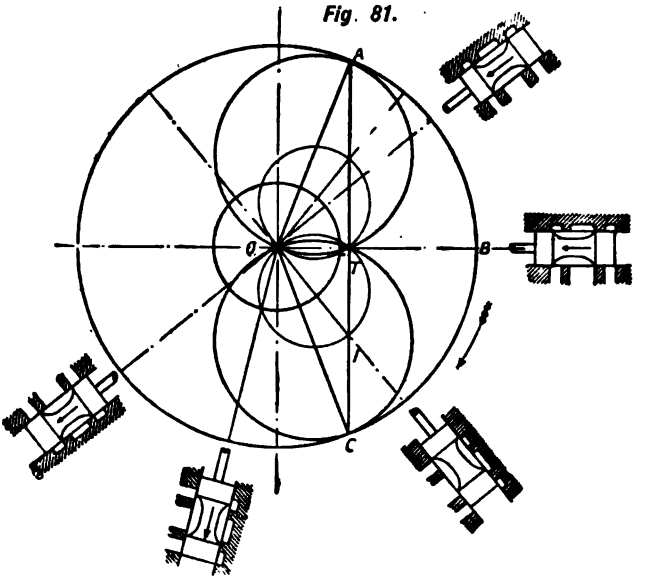

Valve Action shown for Backward Gear, linked up to Position 1.

A valve diagram may be drawn to show the distribution as follows:—

Let S = half stroke of engine. Then make distance O T in valve diagram

$$= \frac{S \times F}{G} = X.$$

From centre O with radius O B = A O in previous figure, but referred to the corresponding motion given to the radius-rod in full gear, draw a circle. From O mark off O T = X and draw A C vertical through T. The line A C then contains the extremities of the virtual eccentric arms, and circles may be drawn for any position of the link block, as shown in the diagram. The inner circle is a lap circle. The lead, it will be noted, is constant.

CORLISS VALVES.

CHAPTER V.

GEARS WITHOUT TRIP MOTION.

CONTENTS.—Advantages of Corliss Gears—Classification of Corliss Gears—Valve Gear without Trip Motion—Effect of Wrist Plate—Reduction of Dwelling Angle—Location of Wrist-Plate Pin—Rules for Diameter of Valves—Angle of Vibration—Position of Levers—Valve Diagram for Corliss Gear—Proportions of Steam Valve and of Exhaust Valve—Double-Ported Valves—Crank-Shaft Governors applied to Corliss Valves—Diagrams of Valve Motion.

ABOUT the year 1850, G. H. Corliss constructed the form of valve which bears his name. Since that time the Corliss valve and its operating mechanism have been modified and improved, until they have attained their present state of perfection, and seem to have settled down to certain designs, which it appears difficult to better.

Advantages of Corliss Gears.—The Corliss valve may be briefly described as being of cylindrical form, working on a cylindrical face, and vibrating on its longitudinal axis. It is the outcome of an effort to produce a valve gear which would present the following advantages:—

1. Minimum of power to actuate the gear.
2. Smallness of clearance spaces.
3. Adaptability to close governing.
4. Good steam opening; instantaneous cut-off; and free exhaust.

Classification of Corliss Gears.—It will be convenient to classify Corliss gears under three heads:—

1. Gears without trip motion.
2. Single eccentric gears with trip motion.
3. Double eccentric gears with trip motion.

The first class is seldom used. The valves have a positive connection with the eccentric, the travel is constant, and the point of cut-off invariable, except between very small limits.

In the second class, the steam valves have no positive connection with the eccentric, but are opened by catches against the resistance of a dashpot, and released at some point of the stroke determined by the governor, or otherwise. The exhaust valves are positively connected to the eccentric and receive a constant movement.

The double eccentric gear is the form usually made in this country. In this class the steam valves are operated in the same manner as in the single eccentric gears, but the exhaust valves are driven from a separate eccentric.

As the action of the first class embodies that of gears with trip motion, it will be conveniently discussed at the outset.

Valve Gear without Trip Motion.—Fig. 82 shows an arrangement of Corliss motion without trip gear. A A′ are the

Fig 82.

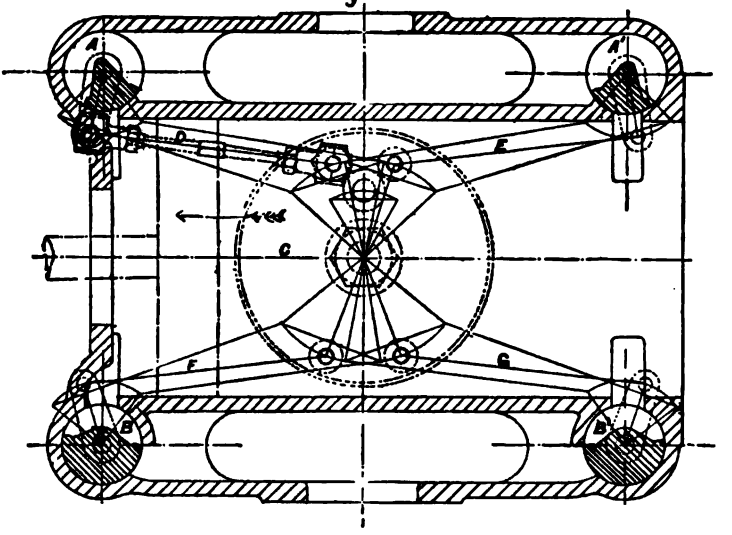

Corliss Motion without Trip Gear.

steam, and B B′ the exhaust valves. These valves are actuated by the eccentric through the medium of the wrist plate C and the wrist plate rods D E F G. When the piston is at the beginning of the stroke and about to travel in the direction of the arrow, the valve will be open a certain amount. This will be lead. At the same time B′ will be open for exhaust, and the valves A′ and B will be closed. The figure shows the wrist plate in its central position, at which time all the ports are closed as indicated. It will be remembered that when a slide valve is in its central position both steam and exhaust ports are closed, assuming that there is no inside clearance; and the probable position of the piston would then be about 10 per cent. from the end of the stroke. The same

condition of things occurs in Corliss gear when the piston is at the same point of its stroke, a position indicated by the dotted lines in the figure. Now it will be easily seen that the front steam valve A has the same function as the front steam edge of an ordinary valve, the back steam valve corresponds to the back steam edge of the slide valve; whilst the front and back exhaust valves produce the same distribution as the front and back exhaust edges of the slide valve. Bearing this in mind the action of the four valves is at once understood.

Effect of Wrist Plate.—The presence of the wrist plate modifies the motion of the valves due to the eccentric to a considerable extent; and the location of the valve-rod pin on the wrist-plate pin is one of the important points in Corliss work. In Fig. 83 is shown

Fig. 83.

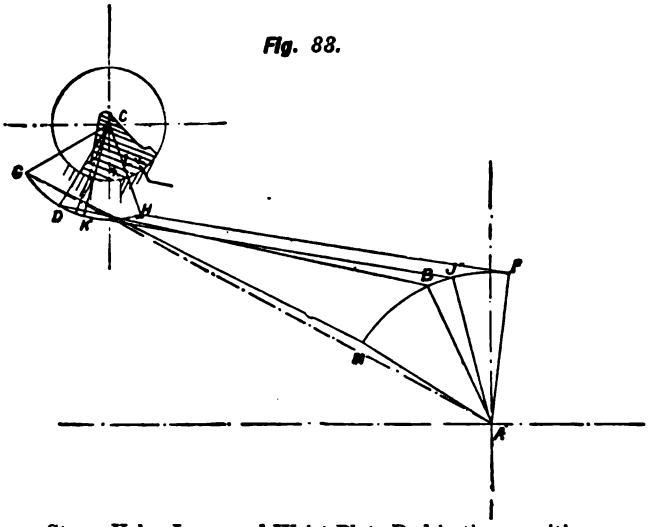

Steam Valve Lever and Wrist-Plate Rod in three positions.

the centre lines of the steam valve lever and wrist-plate rod in three positions. The wrist plate, by virtue of its connection with the eccentric-rod, oscillates through an angle of 33° on each side of its central position, denoted by the line A B; but, by the particular location of the wrist-plate pin B, the valve lever C D swings through an angle of 28° on one side of the position C D, and 51° on the other.

When the wrist-plate lever is at G, the valve covers the port by an amount equal to the lap *plus* the angle D C G taken at the valve circumference. Now, so long as the valve opens to steam at the proper instant, it matters not what its motion between G and D may be, because all that motion, so far as this particular

valve is concerned, is useless. This movement is known as the "dwelling" motion; for during the time it is being worked through, the valve is merely idling over the port. From what has been said, it is apparent that the less the dwelling angle the better; and one advantage of the wrist plate is this, that it permits of the dwelling angle being kept small. If there were no wrist plate—the eccentric-rod coupling directly to the valve lever C D—the dwelling angle would be half the total angle moved through by the valve.

Reduction of Dwelling Angle.—In very large engines, the advantage of a small dwelling angle becomes more pronounced, and,

Fig 84.

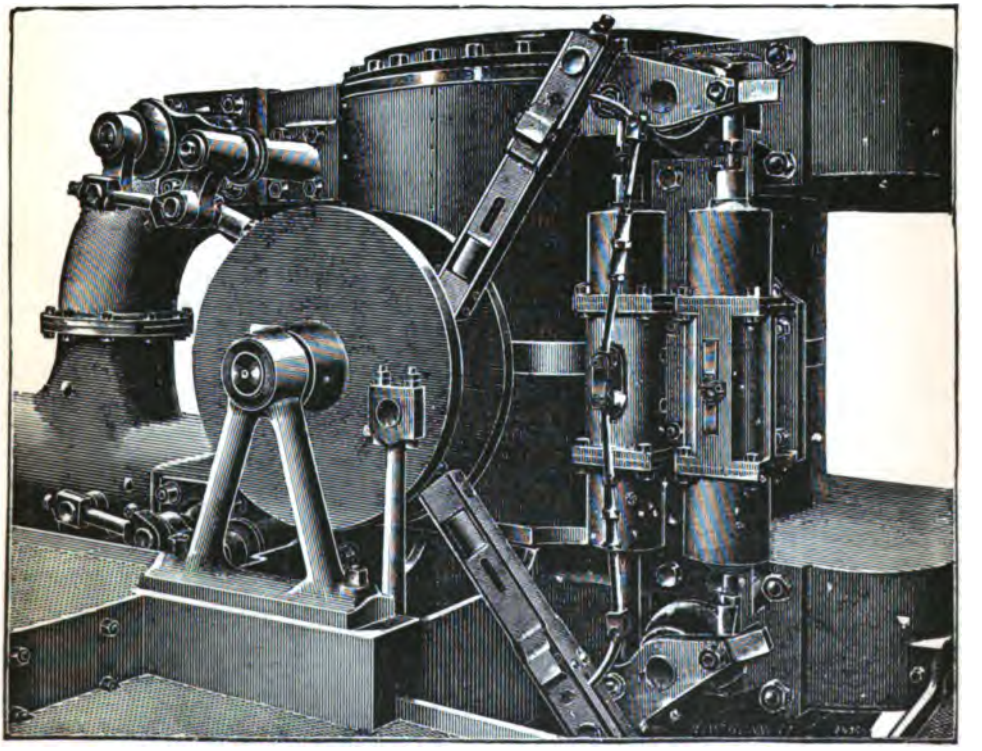

Low-Pressure Gear of Engine designed by Hick, Hargreaves & Co. (by permission of *Engineering*, Ltd.).

cognizant of this, Messrs. Hick, Hargreaves & Co., Bolton in one of their large vertical engines, have gone so far as to introduce an additional lever and rod to actuate the exhaust valves; and by

this means to reduce the dwelling angle to a considerable extent. The accompanying illustration (Fig. 84) is a perspective view of the low-pressure gear of the engine referred to; from which a good idea of the motion may be gathered. On the exhaust side (the left-hand side of the figure) is seen the idling lever and its connection with the wrist plate. Without at present attempting to describe the steam portion of the figure, it may be stated that the trip motion is the well-known Inglis and Spencer gear; and that the large size of the valves necessitated the use of double dashpots; an arrangement whose advantages will be appreciated when trip gears have been discussed.

Another advantage which the wrist plate possesses is the quick steam opening which may be obtained by a suitable location of B (Fig. 83). In this figure the lap of the valve is indicated, and also the position of the valve lever when the port is open for lead. The corresponding position of the wrist-plate pin is J. The angle J A F is 22°, and the angle K C H, 35°. From K to H is the opening angle of the valve, and it will be understood that the quicker this angle is worked through, the better the steam line on the indicator diagram. Angles J A F and K C H are both worked through in the same time, so that the port opening is quicker in the proportion of $\frac{35}{22}$: 1, than would be the case if there were no modification of the eccentric's motion. The rapid movement through the angle K C H throws little extra work on the wrist-plate pins and rods; for when the valve is moving through the dwelling angle, the whole of its surface is under the influence of unbalanced steam pressure; but when the port is open and an equal pressure is established in the cylinder and valve chamber, the only surface not in equilibrium is the width of the facing on the back edge of the port. This distance is indicated by L in Fig. 83.

Location of Wrist-Plate Pin.—Whilst endeavouring to keep the dwelling angle small, it must not be forgotten that by placing the wrist-plate pins too near the horizontal centre line of the wrist plate, the motion will give a double stress on the wrist-plate and valve-lever pins. This should be avoided. In Fig. 83, the centre line of the wrist-plate rod in its extreme position is above the line passing through the extreme position of the valve-lever pin and the centre line of the wrist plate; thus showing that no double reversal of stress occurs. In all wrist-plate gears, the line A M should be the limit of the wrist-plate pin's movement on that side of its central position. The location of B is also governed by the end of the valve-rod, it being evident that the pins must be sufficiently wide of each other to clear the ends of the rods. Sometimes, however, one pin on the vertical centre line of the wrist plate has been used for both rods.

Rules for Diameter of Valves.—The diameter of valves for any given size of cylinder is the next point to consider. This size is usually determined from some empirical formula. It is customary

to let one size of valve serve for several sizes of cylinders, thus effecting a saving in templets and patterns. The rule

$$d = \frac{D}{8} + 2$$

expresses very closely the relation between the size of cylinder and valve. Here d and D are the diameters of the valve and cylinder respectively.

The exhaust valves are sometimes made larger than the steam valves. Then

$$\frac{D}{6} + 2$$

would give a result conformable with modern practice.* The length of the ports on the valve face is in nearly all cases made equal to the diameter of the cylinder, and, the length being decided upon, the width is found.

The length of the valve lever is usually proportioned from the diameter of the valve, although in some cases it is governed to a certain extent by the trip motion. A rule agreeing well with practice and allowing an increasing leverage for high pressures is as follows:—

Length of lever = 1·7 × radius of valve + ⅛ inch for every 10 lbs. above 100 lbs. initial pressure.

Angle of Vibration.—The angle of movement of the valve levers is usually made from 60° to 70°. The dwelling angle *plus* the lap angle has to be worked through before any port opening is obtained, so that the remaining movement is left for port opening. If the wrist-plate diagram has been laid down, the movement of the valve on the face is at once seen; and when the lap angle has been indicated, the amount of travel left for port opening is shown. It is advisable that this should slightly exceed the width of the port in order that a full port opening may be obtained early in the stroke. Should the angle shown not be great enough to give the over travel, a little alteration in the position of the wrist plate pins would perhaps effect all that is required; care being taken that the angles which the valve lever and wrist-plate rod make with each other are easy. In any case it is not advisable to make the angle between these points greater than 140° on the one extreme position, and less than 50° on the other. When these limits are reached in each direction, the angle moved through is about 90°, which is rather excessive. Nevertheless, continental engineers have frequently exceeded these limits, without experiencing any trouble in working. If the necessary movement cannot be obtained except by exceeding the above-named limits, the valve will have to be increased in diameter, or else a double-ported valve must be used. It should be stated that none of the above rules will suit all cases. The wrist-plate diagram is more one of convenience than of exact construction. If all the

* These rules are from the *Mechanical World Pocket Diary*.

angles are easy, and the valves give the necessary port opening, the designer may be satisfied as to its satisfactory working.

Position of Levers.—In arranging the exhaust-valve levers it is necessary to consider the position of the port. Two arrangements are shown in the following figures. In Fig. 85 the exhaust port is towards the centre of the cylinder. In opening, the valve moves in the direction of the arrow, and to give this action at the proper period the exhaust lever must have the position shown by the sketch. In the second case the exhaust port is remote from the

Fig. 85.

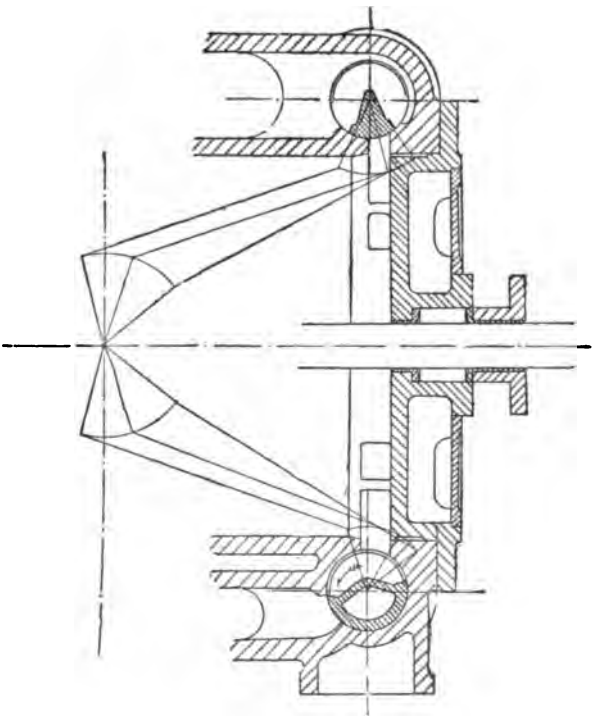

Position of Levers.

centre of the cylinder. This necessitates the valve lever being placed as indicated. Whatever the position of the port, the exhaust valve must be moving in the closing direction when the steam valve for the same end of the cylinder is opening.

Some Corliss engines have both steam and exhaust valves situated below the cylinder. One port at each end serves for both steam and exhaust, and the clearance is rather less than in the ordinary arrangement with a valve at each corner. Fig. 87 shows

Fig. 86.

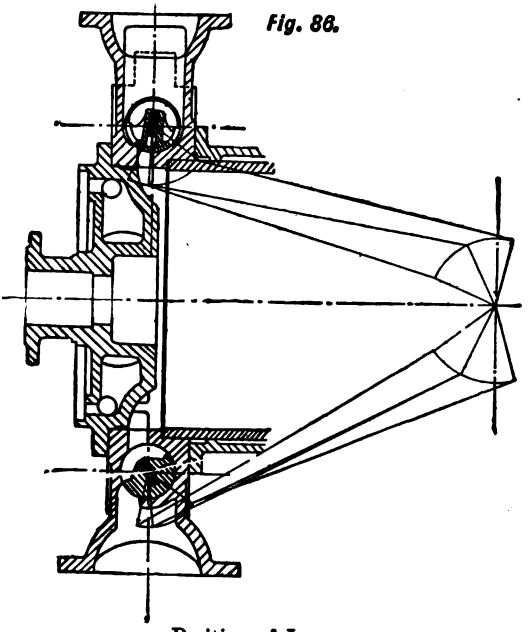

Position of Levers.

Fig. 87.

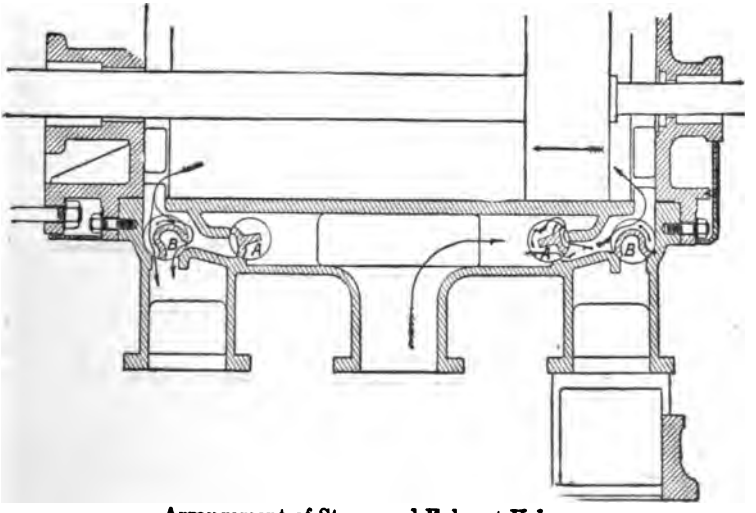

Arrangement of Steam and Exhaust Valves.

the section of a cylinder with the valves arranged at the bottom. Both steam and exhaust valves are double-ported, and the drainage of the cylinder is perfect, thus obviating the necessity of special drain gear. The drawing shows the relative positions of valves and piston at about $\frac{1}{16}$ forward stroke; and the arrows show the direction of steam currents and valve and piston movements at that particular instant.

Valve Diagram for Corliss Gear.—The amount of steam lap required to cut-off at any given point of the stroke is obtained in the manner shown by Fig. 88. Here R is the radius of the wrist-plate pin, and its central and extreme positions are marked A, B,

Fig. 88.

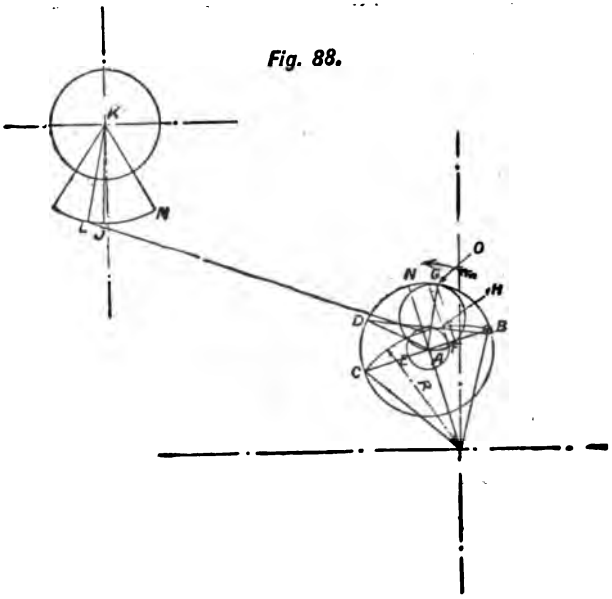

Valve Diagram for Corliss Gear.

and C. Draw the line B C connecting the extreme positions, and on this line as a diameter describe the circle. Imagine this circle to represent the path of the crank pin. Let it be required to cut-off when the crank is in the position A D, which in this instance is about 87 per cent. From B as centre, and with a radius equal to the lead, describe the circle. The line D B drawn as a tangent to the lead circle determines the lap circle E F. At F erect a perpendicular to meet the circle in G. The line F G crosses the radius line of the wrist-plate pins at H. H is the position of the wrist plate pin when the valve opens. From H, and with the length of the wrist-plate rod as radius, draw an arc cutting the valve lever radius at J. Then, in order to cut off at the required point, the lap

at the circumference of the valve must be equal to the distance between the mid position of the valve lever K L, and the line K J, taken at the circumference of the valve. When the wrist plate is in its central position, both steam valves will cover the port by the amount given by the foregoing construction, and this amount is the lap of the valve.

This construction is faulty, insomuch that it assumes the radius of the lead circle on the line B C. The lead at the circumference of the valve may be known, but this does not give the amount of motion on the line B C to produce it. It is known that the valve lever is somewhere between K L and K M when giving lead; and it is easy to assume a position of the valve lever at lead, and find the requisite motion of the wrist plate to give that amount, and

Fig. 89.

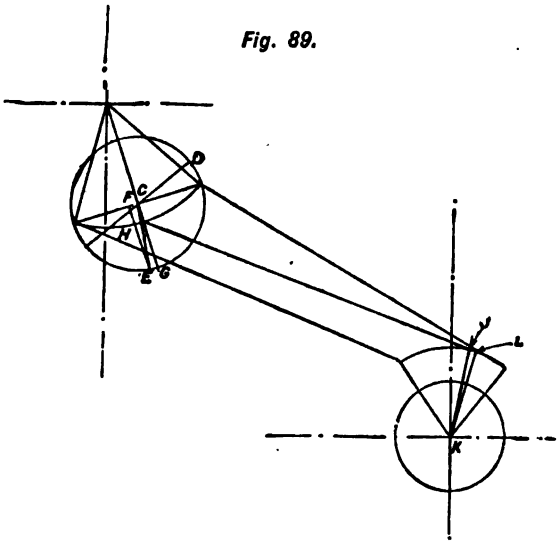

Exhaust Valve Diagram.

thus get the lead circle on B C very near the truth. Then the diagram may be constructed with this approximate amount; and should it be found inaccurate, a second trial will give a result sufficiently approximate for all practical purposes.

Fig. 89 shows the construction of the exhaust valve diagram. The motion of the wrist-plate pin is indicated, and also that of the exhaust valve lever. Connect the extreme positions of the wrist-plate pin by a straight line; and on this line as diameter describe the circle. This will represent, as in the steam diagram, the path of the crank pin. Now the angular advance of the eccentric is given in the steam diagram, Fig. 88, and is indicated by the letters N A O. This angle being known, the position of the eccentric for

any position of the crank is also known. Let C D represent the position of the crank at release. The corresponding position of the eccentric is O E; the angle E C D being equal to the angle O A C, Fig. 88. Draw E F parallel to G C, cutting the wrist-plate pin arc in H. From H as centre, and with the length of the exhaust valve rod as radius, describe an arc cutting the valve lever arc in J. Draw K J, which will be the position of the valve lever when release occurs. The central position of the lever is K L, and therefore the distance between the lines K J and K L on the valve circumference indicates the amount of exhaust lap that is necessary to produce release at the pre-determined point. In the present instance the lap is of a positive character, and the exhaust valve closes the port by the amount obtained, when the wrist plate is in its central position. If the line K J fell on the opposite side of K L, there would be clearance or negative exhaust lap, whilst the coincidence of these lines would denote that the port and valve edges were in line when the wrist plate was central.

If the length of the exhaust valve wrist-plate rods is adjustable, as it ought to be, the equalisation of release or compression for front and back strokes is a simple matter. This is most conveniently done when the engine is erected, and the eccentric coupled up. The exact lengths of the rods can then be obtained, and indicated by centre marks thereon.

Proportions of Steam Valve.—Fig. 90 shows the construction of a Corliss steam valve, and also indicates the proper dimensions

Fig. 90.

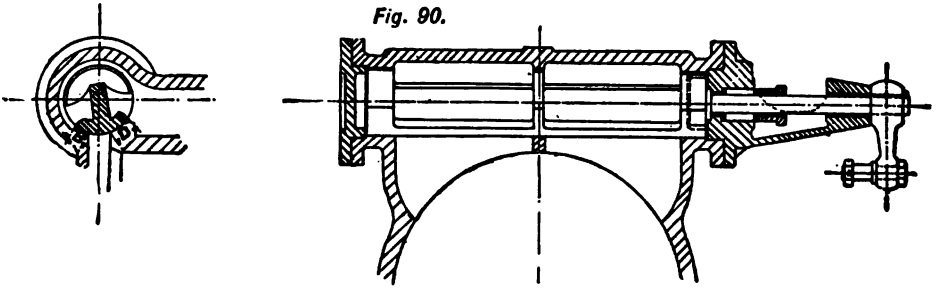

Proportions of Corliss Steam Valve.

of the face. The distance B is equal to the lap as found by the construction of Fig. 88. The dimension D must be sufficient to lap the back edge of the port when the valve is in its extreme position. D must therefore be equal to the dwelling movement taken at the valve circumference, *plus*, say, ½ inch to insure tightness. The connection of the spindle with the valve is made by a palm forged on the spindle, and fitting into a recess at the end of the valve. This construction allows the valve to bed to its face and follow up any wear, and at the same time permits the valve spindle to work in its bearings without constraint. The spindle is shown provided with a stuffing box and packing gland.

This is the most usual construction, but in many cases the packing is dispensed with altogether; the valve spindles being made to

Fig. 91.

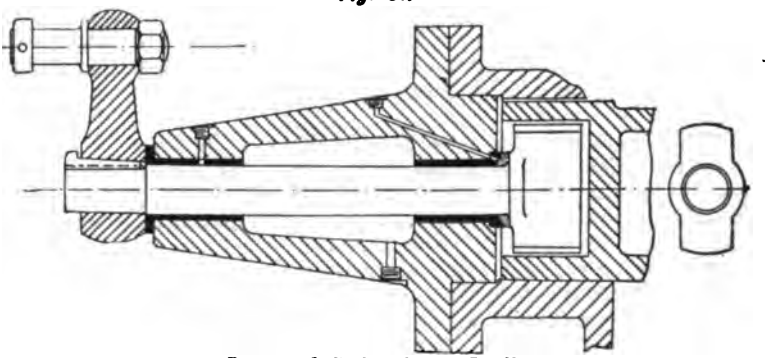

Improved Corliss Steam Bridle.

Fig. 92.

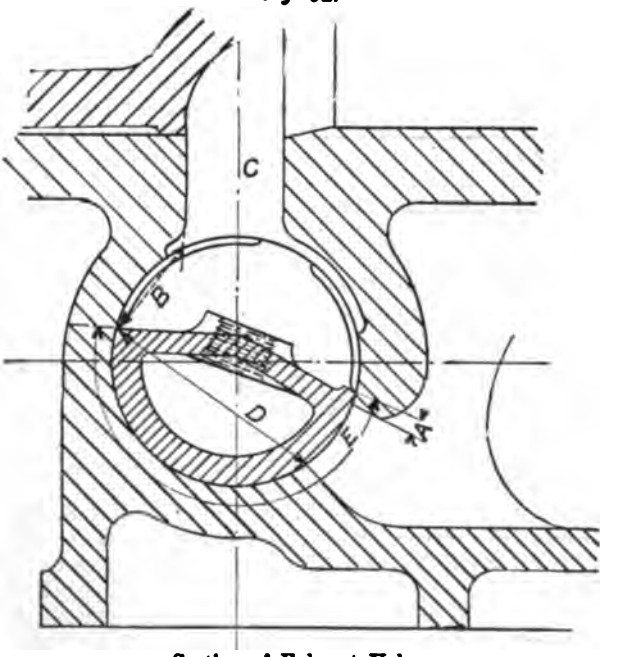

Section of Exhaust Valve.

work in long bushes accurately bored to suit them. In practice, this method of construction is very satisfactory, and valve spindles

thus fitted have been known to run many years without permitting a breath of steam to escape. It is certainly the more mechanical arrangement, and when once in order requires no attention. The friction of a stuffing box is always an unknown quantity, and at times may become excessive and cause undue stress on the pins. In designing this type of bonnet the loose coned collar should not fit on the spindle, but be clear to allow the coned surfaces to bed properly.

Fig. 91 shows the improved type. The spindle is provided with a collar which presses a loose, but accurately fitting, gun-metal ring upon the coned surface of a bush. The surfaces are held together by the end pressure on the valve spindles, and this end pressure is in direct proportion to the steam pressure. In the case of cylinders exhausting into a condenser, the vacuum will tend to draw the exhaust valve spindles into the bonnets, and thus lift the coned washer from its face. This tendency is usually counteracted by a spring between the end of the valve and the back valve box cover. This coned bush arrangement permits of a very neat form of bridle—that of a bright truncated cone with a slight taper, as seen in the frontispiece. Two bushes are usually provided for each spindle, and a cavity formed between them. Any slight escape past the coned surfaces will condense in this cavity, and can be run off by means of a drain tap.

Proportions of Exhaust Valve.—A section of a single-ported exhaust valve is shown in Fig. 92. The positive lap is indicated by A. B must not be less than the active angle of movement, otherwise the valve will obstruct the port C at certain times. On the other hand, B should not be made greater than necessary or undue clearance will be given in the valve chamber. The object to be sought in the design is to take up as much space in the valve chamber as possible without obstructing the passage for the exhaust. D should in all cases be greater than the movement of the valve circumference during the dwelling period, to prevent re-opening on the back edges. Another point that is of practical importance is to limit the angle E enclosed between the front and back edges of the valve to 180°. If this angle be exceeded the valve will be unable to follow up wear in the valve chamber; whereas, with a less angle the valve will continue tight although the wear may have been considerable.

Double-Ported Valves.—Fig. 93 illustrates the double-ported Corliss valve; the correct dimensions for the face are as follows:—A is the width of the port in the cylinder. The width of the valve face B is empirical. Then the width of the exhaust port C = A + B. D not less than the movement of the valve circumference during dwelling angle, *plus* an amount for tightness. The arrow denotes the direction of the opening movement, whilst the dotted lines show the position of the valve when full open. The valve should be designed to take up as much of the chamber as possible without wire-drawing the steam, so as to reduce clearance.

The double-ported form may, of course, be applied to the steam valves, and this is often done in large sizes. The form and proportions of such a valve are shown by Fig. 94. A and B are equal to the lap as found by construction. The width of the port at D is what would be necessary for a single-ported valve; but at C the width is D + F, so as to maintain a full opening. E and G should be equal to the movement of the valve circumference during dwelling angle, *plus* a suitable amount for tightness. The width F, as before, is determined by practical considerations.

This design differs from the exhaust valve in that the clearance is made as small as possible on the underside of the valve, the space on the stop valve side being unimportant. The figure shows the valve prepared for a spindle running the whole length, and carried in a bush fixed in the valve box cover. In a trip-gear engine this design is preferable to having a palm-end on the end

Fig. 93.

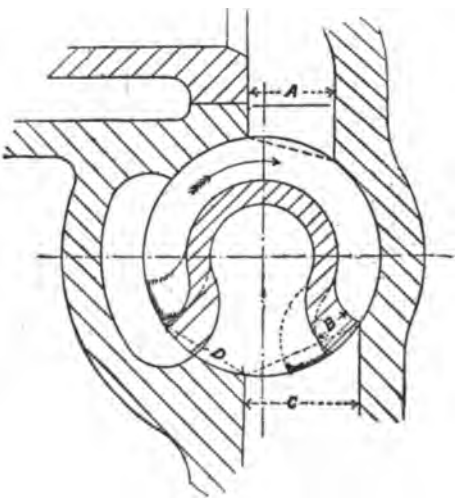

Double-Ported Corliss Valve.

of the valve spindle fitting into a recess at one end of the valve, because it relieves the valve from cross stresses due to the plucking action of the dashpots; and for high speeds it is better able to resist the tendency to beat out the flat portion of spindle. The edges should be designed so that no ledges are worn on any part of the valve or cylinder faces.

In turning the valves and boring the cylinder faces it is important that the cutting tool should meet the steaming edges so that a clear edge is left for trimming to exact size. When the tool *leaves* the edges the metal is liable to break away, thus preventing a precise

steaming edge being formed. A little inequality on the other

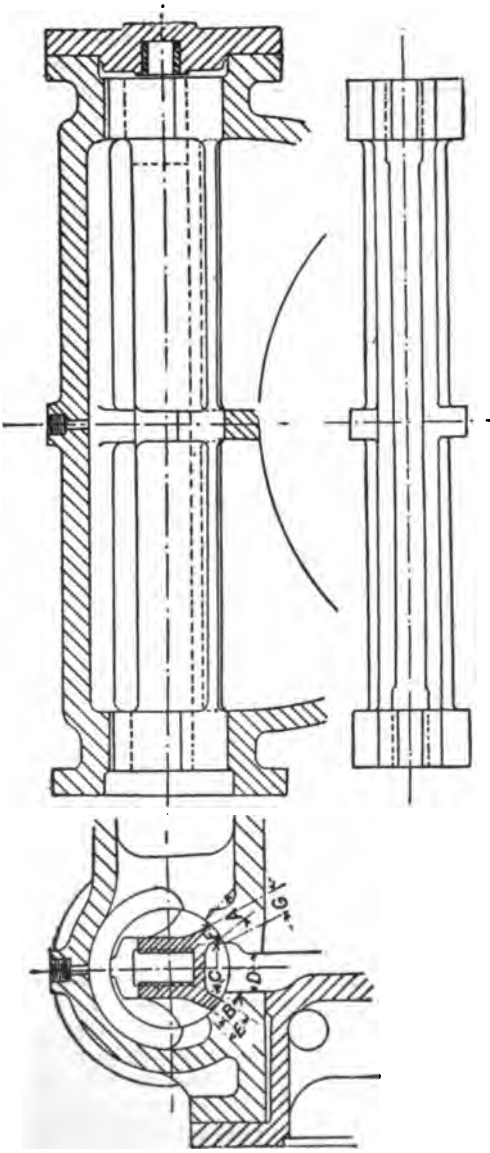

Fig. 94. Proportions of a Double-Ported Corliss Valve.

edges is not harmful, because they perform no function. The figure also shows how ribs may be disposed to give additional

wearing surface; and it will be noted that the design prevents the formation of ledges. These ribs are also necessary to prevent the possibility of the valve and port edges fouling, should there be any deflection due to steam pressure or high temperature. The number of such ribs depends chiefly on the length of the valve and the steam pressure and temperature. In valves not exceeding 14 inches long in the port they may be dispensed with, provided the pressure does not exceed 80 lbs. and the steam is not superheated. From this size up to 26 inches length in the port one central rib is generally sufficient. In high-pressure cylinders the clear space between the ribs should not exceed 15 inches, and in intermediate and low-pressure cylinders not more than 18 to 24 inches, according to pressure, temperature, and size of valve.

The projection at the top of each valve (Figs. 92 and 94) is to facilitate calipering the diameter of the valve when turning in the lathe. In the case of the steam valves this projection should be turned off, because it prevents the steam valve rising in the

Fig. 95.

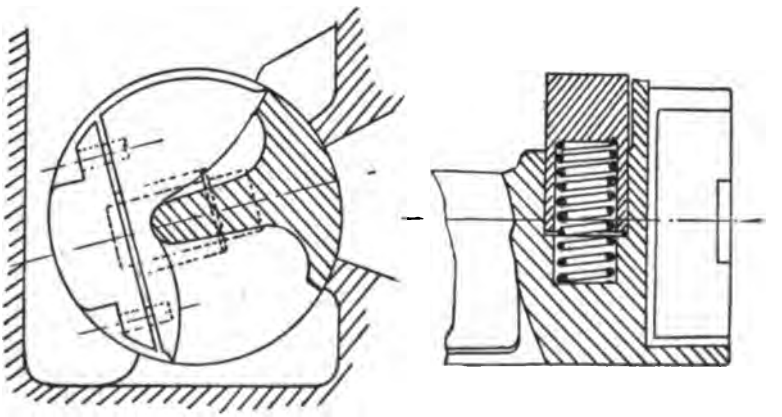

Spring Pads in Corliss Steam Valve.

case of water-hammer or excessive compression, but it may be left on the exhaust valve. In order that the valve may follow up the wear without leakage, the angle between the extreme edges of the valves should not be greater than 180°.

In the case of vertical engines, especially those in which the valves are located in the cylinder covers, means must be provided for keeping the valves up to their face. The common plan is to provide two or more spring pads, as shown in Fig. 95. The pads are prevented from turning in the valve chamber by small pegs, as shown.

There is a tendency for those who have not had much experience

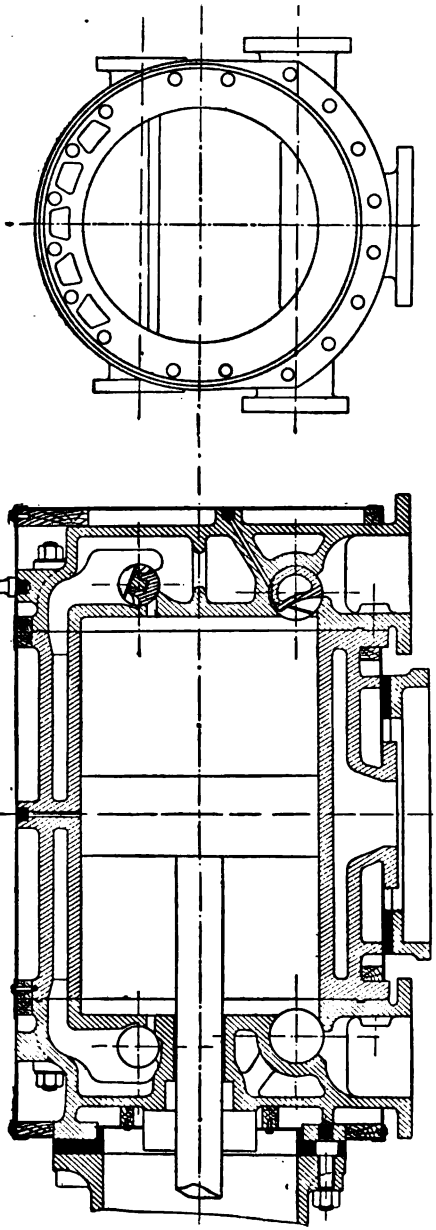

Fig. 96.

in the design of Corliss valve gear to make the keys for the valve lever altogether too light. The ordinary key standard for shafts is not applicable to valve spindles. A common rule for keys is to make the width one-fourth the diameter of the shaft, and the thickness half the width. This rule applied to a valve spindle 2 inches diameter would give a key $\frac{1}{2}$ inch wide and $\frac{1}{4}$ inch thick, which is inadequate to resist the severe writhings and twistings to which valve levers are subject. A spindle of the above size calls for a key not less than $\frac{3}{4}$ inch wide and $\frac{3}{8}$ inch thick. The spindles should project beyond the valve levers to give support to the head of the key, so that when it is withdrawn it is not bent near the head. The spindle also prevents a projecting key-head catching the clothes of an attendant, a common occurrence when this point is neglected.

Attention to these technical matters is essential to satisfactory working, and their neglect causes the valves to fall into disrepute.

Crank-Shaft Governors applied to Corliss Valves.—The combination of a crank-shaft governor and Corliss valves forms a good arrangement, and the design shown by Fig. 96 embodies several features of interest. The clearance is very small, not exceeding 1¼ per cent., and all faces in contact with expanding steam are machined. The steam velocity is high, being about 220 feet per second with a full port opening, and the piston at maximum velocity. The exhaust opening, however, is very liberal, and does not give a higher maximum speed than 110 feet per second. The

Fig. 97.

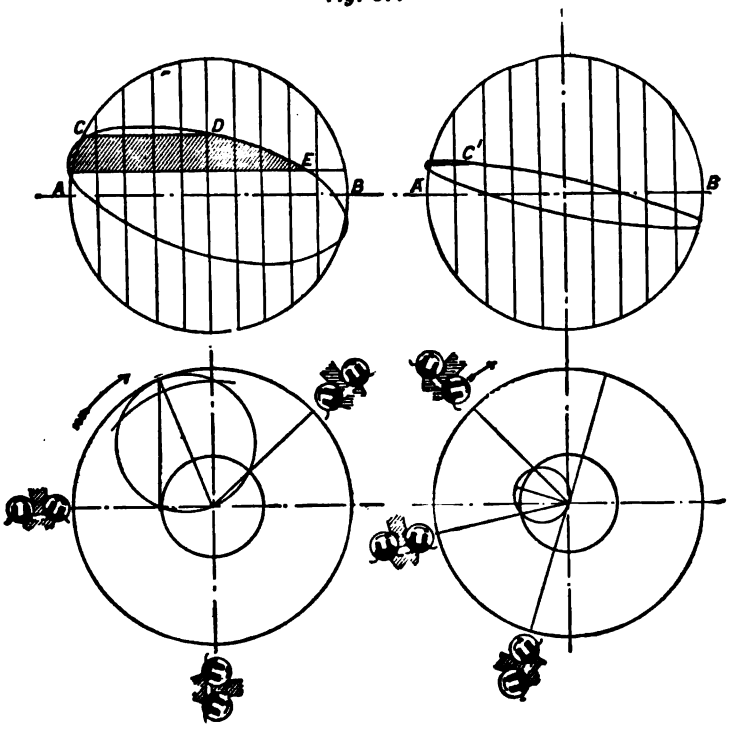

exhaust ports drain the cylinder very effectively, and in all positions the valves are clear of the space swept by the piston. Both steam and exhaust valves are provided with spring pads to prevent heeling over at extreme positions.

The special feature of the engine lies in the means adopted to prevent conduction of the heat from the cylinder to the frame and cylinder stools. It will be noticed that a thick ring of felt is inserted between the cylinder flange and bed frame, and collar studs are used to form a rigid connection. The same construction

is adopted for the cylinder feet; and the lagging is arranged to enclose all flanges and covers, and at the same time to be insulated from the hot metal of the cylinder.

The action of crank-shaft governors having already been discussed, further description is unnecessary. It may be remarked, however, that the governor must alter both the angle of advance and the throw of the eccentric in order to keep admission rightly timed. A governor of the type shown by Fig. 48 is unsuitable, but the Westinghouse governor, Figs. 50 and 51, or Robinson's governor, Fig. 52, is well adapted for the purpose. The exhaust valves are driven from a separate eccentric in order to avoid undue throttling of the exhaust, and to relieve the governor of as much work as possible.

Fig. 98.

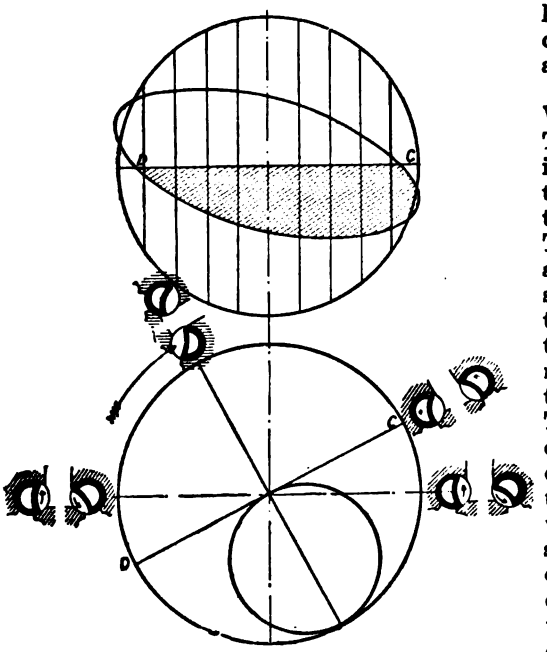

Diagrams of Valve Motion.—The accompanying diagrams illustrate the action of the steam valves. The horizontal axis A B represents the stroke of the engine; whilst the extreme width represents the travel of the valve. The stroke is divided into ten equal parts, and the points at which these divisions intersect the diagrams show the distance of the valve from its central position. The shaded portion shows the port opening, and the fact of the diagram passing beyond the line C D denotes that the valve has over travel. In the left-hand diagram the valve has its maximum travel, and the point of cut-off, E, is latest. At an early cut-off, the diagram assumes the form shown by the right-hand figure. The lap, of course, remains the same, but the travel is reduced, and cut-off is consequently at C′. Below the elipse diagrams are shown the steam distributions for the early and late cut-off by Zeuner's method.

The diagrams for the exhaust valves are shown in Fig. 98. Release and compression are at C and D respectively.

CHAPTER VI.

SINGLE ECCENTRIC GEARS WITH TRIP MOTIONS.

CONTENTS.—Principles of Trip Gears—Advantages of Trip Gears—The Reynolds Trip Gear—Diagram showing Range of Trip—Diagram for Reynolds' Trip Gear—Clearance of Catches—Movement of Trip Levers—Cause of Popularity of Corliss Gear in America—Valve-Rod Ends—Arrangement of Link-work.

Principle of Trip Gears.—The class of Corliss gears fitted with trip motions has now to be considered. In mechanisms of this description, the steam valves are not in positive connection with the eccentric, but are moved by it against the resistance of a spring, weight, or vacuum. The eccentric-rod, or some other rod connected thereto, is provided with an arrangement whereby it engages with the valve lever, and communicates its motion to the steam valves in the opening direction only. This engagement is broken at a certain position in each revolution, determined by the governor, or by hand, and the valve, freed from all connection with the eccentric, is at once closed by the springs or whatever may be employed for the purpose.

Advantages of Trip Gears.—The arrangement just described has several important advantages. The first is the way in which the governor controls the engine, whereby the steam is cut off at the point requisite to maintain a uniform speed; the function of the governor being not to close the valve, but to determine when it shall be closed. Extremely sensitive governors of small size can therefore be employed which, from the nature of their construction, are quite unsuited to the regulation of large slide valves.

The most valuable feature of trip gear, however, is the great range of adjustment that may be obtained in one valve without disturbing the functions of the others. This is a considerable advantage, because it enables the attendant to adjust his valve gear to the conditions of working. With slide valves this is no easy matter, and there is not the same encouragement to obtain the most economical setting of the valves; consequently, a faulty action in some of the functions is often tolerated because its cure would interfere with other events in the cycle.

The rapidity of cut-off is another point which has been claimed as an advantage. A sharp corner looks very well on the indicator card, but the effect on the coal bill is insignificant.

The Reynolds Trip Gear.—As a typical example of trip motion the Reynolds gear is selected and illustrated by Fig. 99. This gear is the invention of Mr. Reynolds of the E. P. Allis

Company, Milwaukee, America, in which country it is most common. The patent right of the invention having expired any one may manufacture the gear.

In Fig. 99 the double-ended lever A, to which the wrist-plate rod B is connected, swings loose upon the valve bridle C. This lever carries on its upper end a trip hook D, supported by a pin fixed in the lever A. The lever E is keyed on the valve spindle, and thus imparts any motion which it may receive to the valve. F is a square pin fixed in the lever E, and fitted with a steel catch or face as shown by the figure. On the lever E, and between the valve spindle C and the square pin F, another pin is provided. This pin G has a continual downward force exerted upon it by the

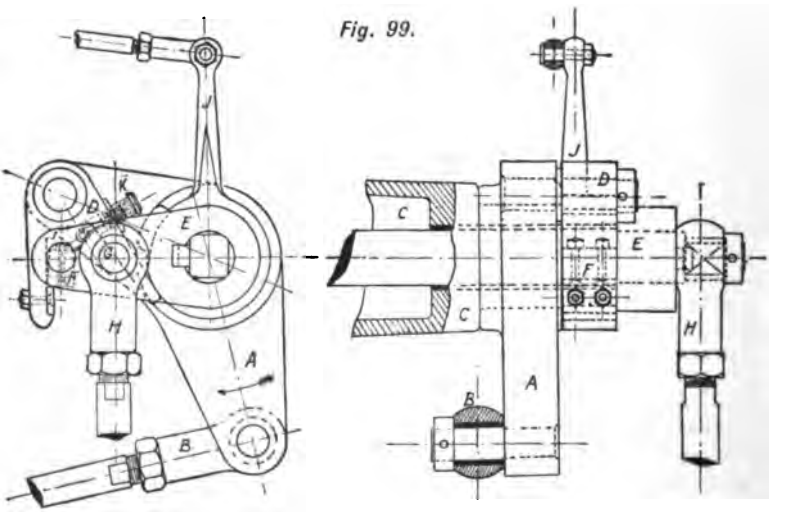

Reynolds Trip Gear.

dashpot through the medium of the dashpot-rod H, and will, therefore, unless prevented, always occupy its lowest position. A steel catch on the trip hook engages with the steel catch on the pin F; and while this engagement holds, any movement of the lever A in the direction of the arrow will draw up E through the medium of the trip hook, and E, being fast to the spindle, moves the valve. It will be seen that if by any means the catch on F becomes released from the trip hook, the lever E will at once descend to its lowest position, and in so doing close the valve. It only remains to devise a means of effecting the disengagement at any desired instant, and the essentials of a trip gear are obtained. The method of accomplishing this disengagement is as follows:—The lever J, situated between the levers A and E, is loose upon the

bridle C. On the boss of this lever is a steel piece which projects above the surface of the boss. The inner limb of the trip hook rests upon this boss, being kept in position by a steel spring K enclosed in a brass box. During the motion of the wrist-plate lever A in the direction of the arrow, the trip hook is carried up, and because the steel catch thereon engages with the catch on the dashpot lever E, the latter also rises. This state of things will continue until the limb of the trip hook strikes the steel piece on the boss of lever J, when the hook is caused to oscillate upon its pin, and in so doing forces the steel catch clear of the catch on the dashpot lever, which is at once dragged down by the dashpot. From a consideration of the motion it will be seen that there is a sort of sharpening action on the catches when at work, whereby the edges remain in good condition for a considerable period. The steel catches are secured to their respective levers by small bolts as shown, and are sometimes designed so as to be reversible, thus presenting eight edges for wear.

It is clear that by varying the angle of the trip lever the position of contact of the projecting piece thereon with the limb of the trip hook is also varied; and it is also clear that if J be connected to the governor in a suitable manner, the latter will have control over the cut-off by determining the point at which the lever E is released.

Diagram showing Range of Trip.—A study of Fig. 99 will reveal one important fact—namely, that tripping can only take place when the wrist-plate lever is moving in the opening direction. This statement is true of so many gears that it may be laid down as a rule.

Let A B, Fig. 100, represent the crank of an engine, and A C the eccentric having an angle the cosine of which is equal to lap *plus* lead. As drawn, the engine is on the back dead centre, and the steam valve at that end of the cylinder would be open to lead. The eccentric is moving the valve in the opening direction, and will continue to do so until it reaches A D. The angle of advance C A B is unaltered, and, therefore, when A C is at A D the crank is at A E, angle D A E being equal to angle C A B. The eccentric now returns, and unless the trip has operated before this return motion has commenced, it will not do so during that stroke. Therefore, with an eccentric set in the position A C, the total range of tripping is only from B to F, in this instance about 25 per cent. of the stroke. Such a range, however, is scarcely suitable for many cases, where it may be requisite on heavy loads to carry on steam to 50 or 60 per cent.; and at other times, when running light, to say 5 per cent. only. With the setting shown by Fig. 100, if the trip missed, steam would carry on till the crank reached A G, the valve then cutting off by virtue of its lap. Thus it is seen that between A E and A G the governor has no control over the steam.

Now take the case of an eccentric set in the position A C,

Fig. 100.

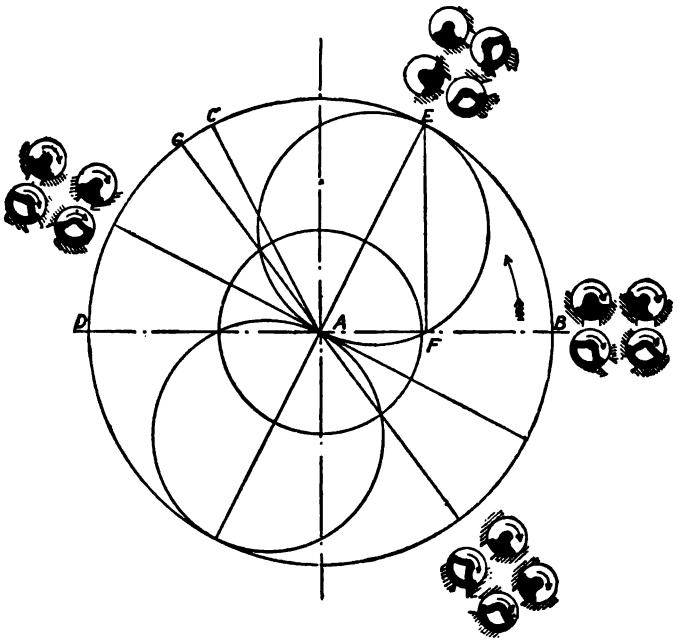

Valve action shown is when trip gear is inoperative. Cut-off edges of steam valves outside. Cut-off edges of exhaust inside.

Fig. 101.

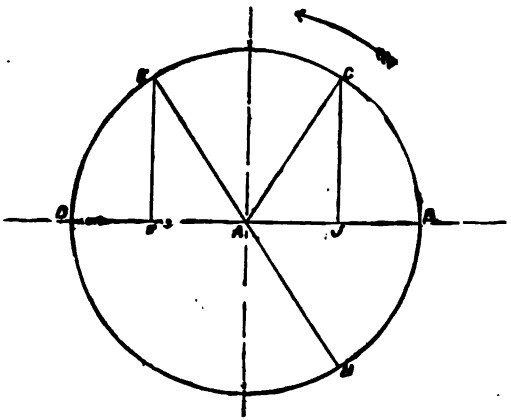

Fig. 101. The letters in this diagram correspond with those in the previous figure. Here it is evident that the range of trip is considerably increased, being now B F, about 78 per cent. When the crank is at B, the valve is open to lead as before, but when the eccentric is in this position, the crank will be at A H, angle H A B being equal to angle C A B. In order to give the desired amount of lead, the valve must cover the port by an amount equal to J B minus lead, when the eccentric is at A B, and J B minus lead is therefore the lap of the valve. This diagram, so far as admission and range of trip are concerned, is perfectly satisfactory; but to attempt to work the exhaust valves from such an eccentric is altogether out of the question; hence, when a range of trip such as is here shown is required, it becomes necessary to employ a separate eccentric for the exhaust valves. Although the diagrams give the position of the crank when tripping takes place, it must not be assumed, as is commonly done, that actual cut-off takes place at the same point of the stroke. In Corliss engines, especially those running at a high speed, a longer cut-off is obtained than would appear possible from the valve gear, for the piston will sometimes travel several inches whilst the valve is moving from open to closed position. A useful point to remember in this connection is that the maximum load a trip-gear engine will carry can be increased by slacking the buffer springs, thereby increasing the time occupied by the steam valves in closing.

Diagram for Reynolds' Trip Gear.—The valve diagram for a single eccentric gear is given in Fig. 102. The construction is as follows:—From the line A B, the position of the valve lever when the wrist-plate is in its central position, mark off on the valve circumference the lap and lead; and through the lead point draw the centre line of the valve lever A C. From C as centre, and with the length of the wrist-plate rod as radius, describe an arc cutting the path of the wrist-plate pins in D. Draw the line D H perpendicular to the line joining E and F, the extreme positions of the wrist-plate pin. Then with the lap and lead chosen, the correct position of the eccentric is given by the line J H. The range of trip will be from J F to J H. Should the trip miss, steam will run on to about J K, when the valve will cut-off by virtue of the lap.

The exhaust portion of the diagram is shown in position indicating compression at M N and release at M O. These points, in consequence of the small angle of the eccentric, are rather late in the stroke, but unless the lap of the steam valve be increased, this distribution cannot be improved. Increasing the lap means increasing the angle of the eccentric, and, therefore, a reduction of the tripping range. Thus, excellence in one point can only be purchased by defect in another; and herein lies the chief objection to single eccentric gears.

In the above instance the lap has been assumed, and the correct position of the eccentric determined from it; but the better method

is to fix upon some angle of eccentric, and by reversing the process just described, to find the lap. An angle of 15° has been employed in some cases. This angle gives a fair range of trip—about 37 per cent., whilst compression and release, although somewhat late, are not exceptionally untimed.

Fig. 102.

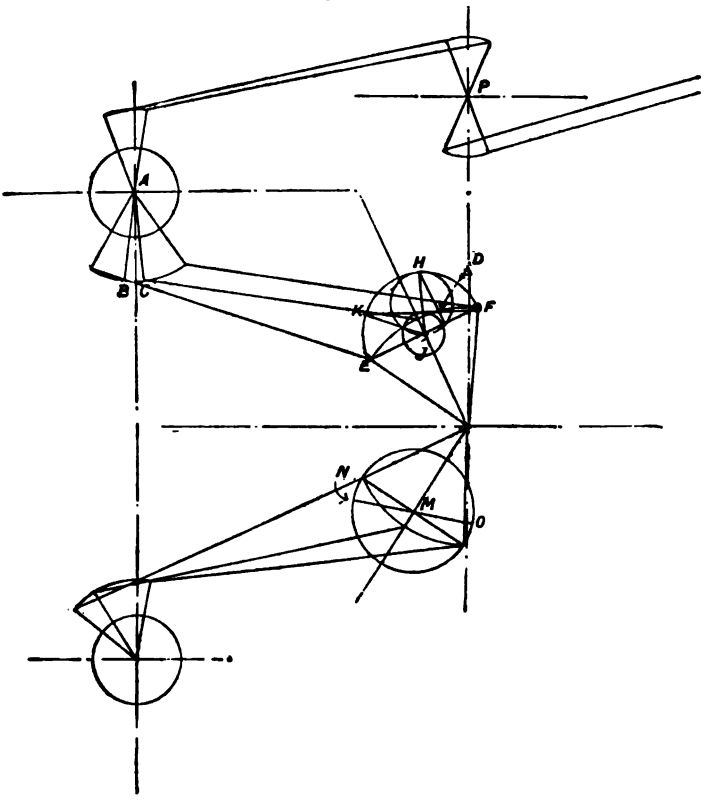

Clearance of Catches.—It now becomes necessary to revert to Fig. 99 to consider the movement of the dashpot and trip levers. The length of the trip hook and the angle between the two arms of the lever A should be designed so that the dashpot lever, when making the latest trip, vibrates equally on each side of the horizontal centre line of the valve spindle; and the dashpot should be placed so that its centre line bisects the versed sine of the arc described by the pin G. When disengagement takes place, the dashpot lever at once descends to its lowest position, and remains there till the trip-hook catch comes down to engage the square pin F. It should be arranged that the catch on D

descends about $\frac{3}{32}$ of an inch lower than the catch on E. This distance is known as "clearance." The maximum angle which the dashpot lever moves through is therefore equal to the total movement of the wrist-plate lever A, *minus* the angle occupied by clearance.

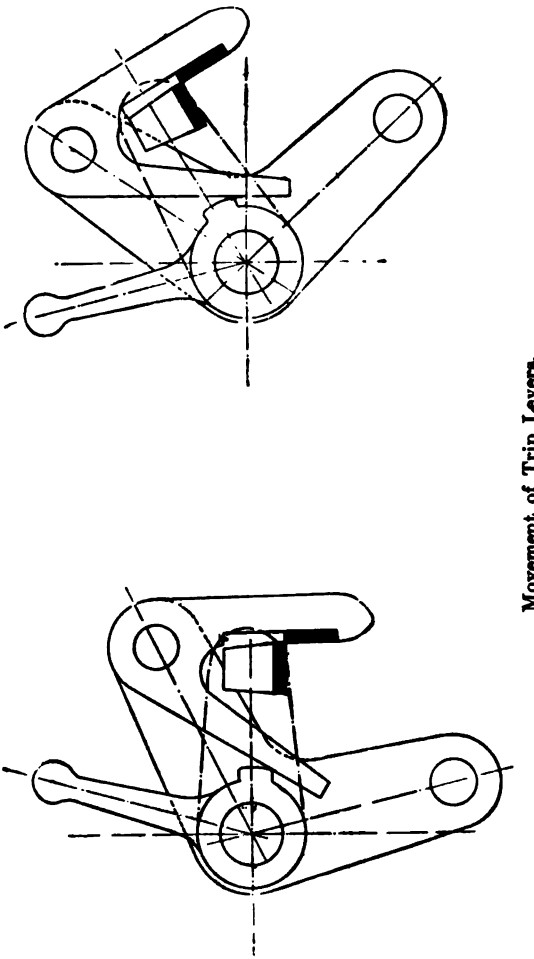

Fig. 108. Movement of Trip Levers.

Movement of Trip Levers.—The proper angle and movement of the trip lever are easily found. The wrist-plate diagram being laid down, the position of the lever A, and consequently that of the trip hook for any crank position, are known. Lay down the

position of the parts when the crank is on dead centre; the catch on the trip hook being flush with the catch on F as here shown. The limb of the trip hook is then clear of the boss of the trip lever by the depth of engagement of the catches. Now draw the trip lever in such a position that the projecting piece on its boss just touches the trip hook. This will be its position at earliest cut-off. Next lay down the parts in position when the wrist-plate lever is in its extreme position in the opening direction, as shown by the right-hand diagram of Fig. 103. The crank is then in the position indicated by the line J H in Fig. 102. Again draw the trip lever with the projecting piece just touching the trip hook, and this will be its position at latest trip.

The method by which the trip levers for each end of the cylinder are made to move equally in opposite directions is clearly shown in Fig. 102. With reference to this matter, it will suffice to say that P is a fixed centre of motion, and the governor actuates the double-ended lever swinging on centre P.

In the best designs of this gear the valve lever A and the trip lever J do not ride on the valve spindle, but are carried by the bridle, as here drawn. This arrangement allows the dashpot lever to be placed close to the end of the bridle, thus reducing the bending action on the valve spindle. It also gives a greater bearing surface for A and J, and a smaller trip hook. The latter point is an important one where high speeds are concerned.

Cause of Popularity of Corliss Gear in America.—In America, Corliss employed only one eccentric to operate both steam and exhaust valves; an arrangement whose very defect has perhaps contributed more to the popularity of Corliss gear than anything else. The one eccentric precludes the possibility of cutting off after about $\frac{4}{10}$ stroke, which was little later than the most economical point for pressures then common. Whenever a Corliss engine was put down, it was imperative that it should perform its work within this range of expansion, so that the owner was unable to run his engine except under economical conditions. The advantage over those engines which were too small for their work was at once apparent, and gave rise to the common notion that the economy was due solely to the valve gear.

Valve-Rod Ends.—Various forms of valve-rod ends are shown in Figs. 104 to 107. The design in Fig. 106 is neat and inexpensive, and the construction enables the brasses to be adjusted without removing them. The next type differs only in the outline of the rod end, and is by some preferred, especially when used next to turned levers, with ball ends. Both designs may be turned from a steel bar without forging. The wedge adjustment type of end is illustrated by Fig. 104, accompanied by a table of dimensions. This is an excellent end, suitable for eccentric-rods and coupling-rods. It may also be formed from a straight bar without forging.

Fig. 104.

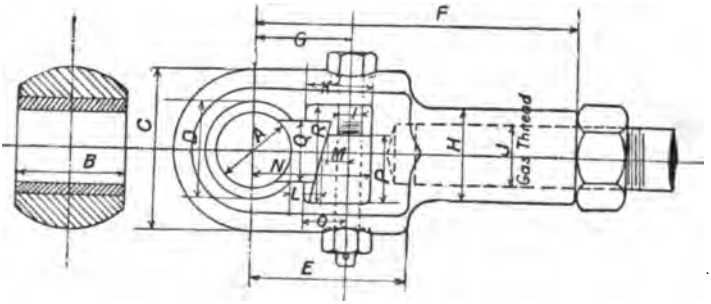

Fig. 105.

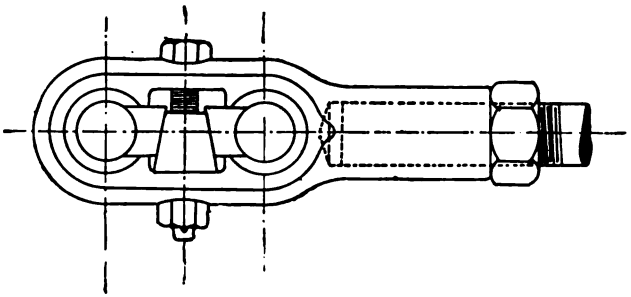

Fig. 106.

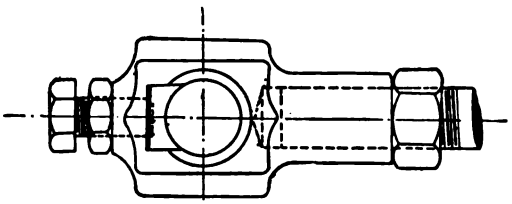

Fig. 107.

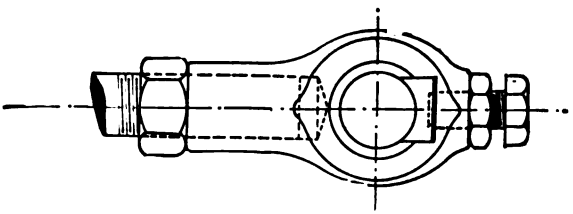

Valve-rod Ends.

TABLE OF ROD ENDS (DIMENSIONS IN INCHES).

A	B	C	D	E	F	G	H	I	J	K	L	M	N	O	P	Q	R
1	1½	2⅝	1½	2¾	5¼	1⅝	1⅜	½	⅝	1	⅝	½	2 1/16	¾	1	¾	1½
1⅛	2	3	1⅝	3	5⅞	1 11/16	1⅝	½	¾	1	11/16	9/16	2¼	¾	1¼	⅞	1¾
1¼	2	3	1¾	3	6⅛	1 11/16	1⅞	½	1	1	⅝	9/16	2¼	⅞	1½	1	1¾
1½	2¼	3⅜	2	3¼	6¾	1 13/16	1⅞	½	1	1⅛	⅝	9/16	2 7/16	⅞	1⅝	1¼	2
1¾	2½	3⅝	2¼	3½	7¼	2 1/16	2⅜	1	1¼	1⅛	⅝	⅝	2⅝	15/16	1⅝	1½	2¼
2	3	4½	2¾	3⅞	8¼	2⅜	2¾	⅝	1½	1¼	¾	⅝	3	1	1⅞	1¾	2⅝
2¼	3½	5	3	4	8⅝	2½	3	⅝	1¾	1¼	¾	⅝	3⅛	1	2⅛	2	3
2½	3¾	5½	3¼	4¾	9¾	2⅞	3½	¾	2	1½	13/16	13/16	3⅝	1⅛	2⅝	2¼	3⅜

In arranging the valve gear of engines it is often convenient to carry the motion from one pin to another in the same vertical plane, and for such cases the arrangement shown in the next

Fig. 108.

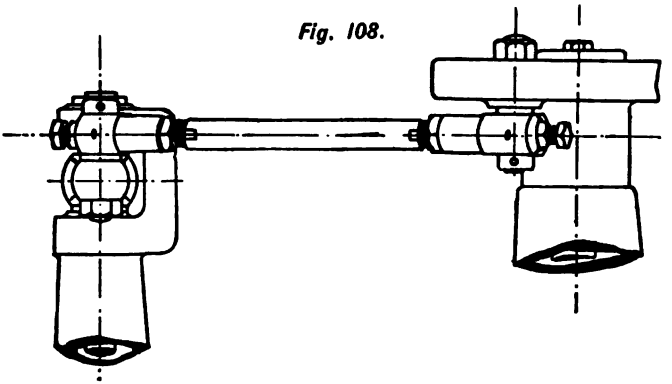

Arrangement of Link-work.

Fig. 109.

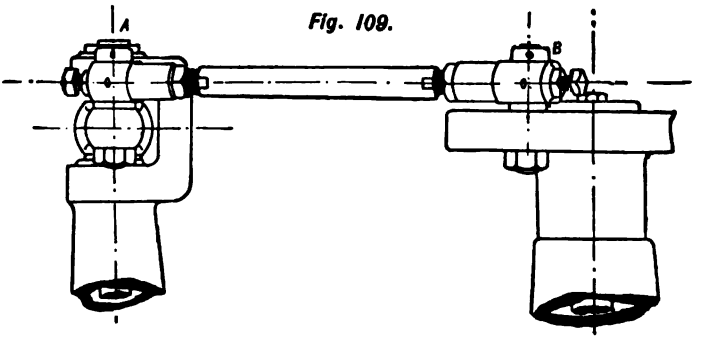

Arrangement of Link-work (another method).

figure is useful. The table of dimensions given will apply to this design to a considerable extent.

Arrangement of Link-work.—In designing the link-work of Corliss gears it should be arranged that all rods can be taken off their pins by simply removing loose collars. This is a point sometimes forgotten, or at least neglected. In the arrangement shown by Fig. 108, which is a plan view of a wrist-plate rod and its connections, it is evident that to remove the rod it is necessary to remove the rod from one of the sockets; whereas if it were arranged as shown by the next figure, the dismantling is effected by removing the two loose collars A and B. Then the length of the rod is not altered, and may therefore be replaced without any re-setting. These remarks apply to the governor trip rods, and in fact to all link-work of a similar nature.

CHAPTER VII.

DOUBLE-ECCENTRIC GEARS WITH TRIP MOTIONS.

CONTENTS.—Movement of Valves in Double-Eccentric Gears—Diagram of Motion—Speed of Trip Gears—Range of Trip—Proportion of Valves—Musgrave's Trip Gear—Wood's Valve Gear—Inglis and Spencer's Slip-rod—Arrangement of Inglis and Spencer's Trip Gear—Pollit & Wigzell's Gear—Dobson's Trip Gear—Valve Diagram for same—Knock-off Gears and Vacuum Breakers—Goodfellow's Gear—Governor and Trip Gear Design—Dashpots—Dashpot Springs.

THE advantage of double-eccentric gears has already been commented upon. It remains to discuss the action of this class.

Movement of Valves in Double-Eccentric Gears.—The difference between the motion of a single- and double-eccentric gear is, that whilst in the single-eccentric gear the dwelling period of the steam valves occupies half the travel of the wrist plate, the steam valves of a double-eccentric gear have, strictly speaking, no dwelling period; all the motion of the valve lever being taken up by lap, clearance of trip edges, and port opening. The steam valves never lap the port by an amount greater than the lap; hence, other things being equal, a less movement of the valve lever is required than with a single-eccentric gear by the amount of dwelling angle referred to the valve circumference. It has been common practice to make the augular movement of double-eccentric steam valves from 60° to 70°; and to make the port one-tenth the valve circumference. These are good rules, and, with an ordinary amount of lap, give sufficient over-travel to produce a full port opening early in the stroke.

The action of the steam valves will be understood from the annexed diagram and the following description:—

Diagram of Motion.—The circle B C D (Fig. 110) represents the travel of the valve by its diameter, and the path of the crank pin by its circumference. Let the total range of trip be from C to E—that is about 75 per cent. Draw E B perpendicular to C D, and from E mark off the lead E F. Then F D is the necessary lap of the valve, and the position of the eccentric is denoted by the line A B, the crank pin being, by supposition, at D. Describe the lap circle F N L. Produce A B to J, and describe the valve circle A G J. The valve and lap circles intersect at G. From A draw a line

through G, and produce it to the crank-pin circle. Then A K is the crank position when admission commences. From this point the port opening continues to increase, and at crank position A M is equal to A N. A N is at right angles to B J, and the port opening for any position of the crank between A M and A O, in the clockwise direction, is given by an ordinate between the lap circle and the remote side of the valve circle. Thus, at A P the port opening is Q R, and so on. After A O, the port opening is indicated by the ordinate between the lap circle and the adjacent side of the valve circle. The lap and valve circles intersect at L. This denotes that the port is closed, and the diagram shows that it remains so till A K is reached. This would be the steam distribution if the valves were positively connected to the eccentric-rod

Fig. 110.

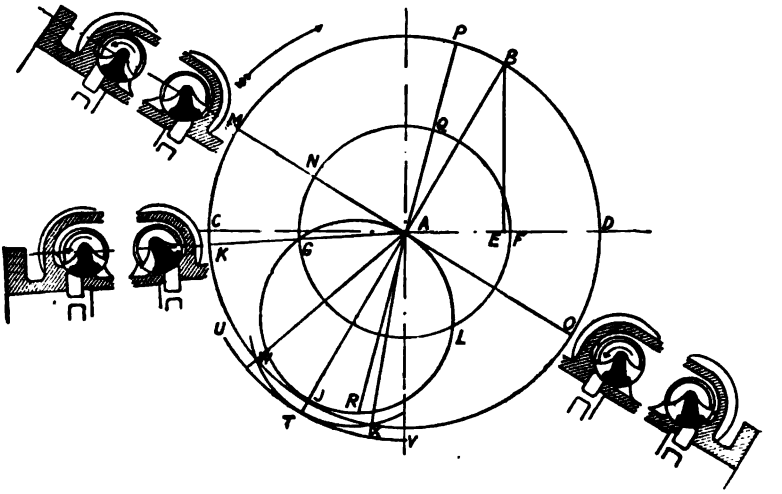

and operated without the intervention of trip-gear, and it is seen that steam carries on to A L. Such a state of things is, of course, absurb, but it must be remembered that the trip gear releases the catches before the crank passes A B, and the valve closes, remaining stationary until re-engagement takes place.

Speed of Trip Gears.—It will have been noticed that engagement of the catches must take place twice during each revolution of the engine, and as the catches in many cases only move past each other $\frac{1}{16}$ or $\frac{1}{8}$ of an inch, it will be understood that there is not much time for engagement. In fact, it is well known that a speed of 120 revolutions is about the limit for trip gears without wrist-plates,

but with them the speed may easily be increased to 140. Much depends on design; and when high speeds are sought the parts which fly with the dashpot should be light, yet sufficiently strong; and the part which carries the dropping catch should be so light as to give rapid engagement. When this speed is exceeded missing of the catches is a likely occurrence.

In the previous figure let J T represent the clearance of the catches. With centre A and radius A T describe the arc U V. On A T as diameter, describe a portion of a circle cutting the valve travel circle in W and X. At X the catches are flush with each other. From X to T the clearance is being worked through, and at the latter point the valve lever is in its extreme position. From this point the catches approach one another and have re-engaged at W, at which point the valve begins to move. While the crank is passing from A X to A W the catches must re-engage or else a miss trip is the result. Take the case of an engine running at 100 revolutions per minute, and let the angle X A W be 30°. Under these conditions the time for re-engagement is only $\frac{60 \times 30}{100 \times 360}$; that is $\frac{1}{20}$ of a second.

It may be asked, why not give the catches more clearance to allow a longer time for engagement? The objection to this proposal is that more clearance would cause the engagement to occur at a time when the wrist-plate levers were moving at a comparatively high speed, and the inevitable result would be a considerable jar on the catches and wear on the pins. When the clearance is small, the eccentric is very near its dead centre when engagement takes place and is therefore moving the wrist-plate lever very slowly. The catches thus engage easily and without shock. With a well-designed wrist-plate arrangement a less clearance may be given because of the slow motion of the valve-rods when the catches are engaging. For the same reason a higher speed may be obtained, because the modification of the motion due to the wrist-plate keeps the striking velocity of the catches low, and allows more time for engagement.

Range of Trip.—It is usually 75 per cent.; a smaller one has the disadvantage of increased lap, which, to maintain the same port opening means increased travel; on the other hand, the full port opening is attained earlier in the stroke. By increasing the range the lap is decreased, but the crank position at full port is later.

Proportions of Valves.—As there is no dwelling angle in the steam valves of double-eccentric gears, it is sufficient to make the valve face lap the port on the back edge by an amount necessary for tightness and bearing surface when the valve is full closed.

The width of the face will therefore be—

Steam lap + width of port + back lap.

The exhaust valves having dwelling periods, of course, like the single-eccentric gears, their proportions are the same.

Messrs. Musgrave's Trip Gear.—The form of trip gear made

by Messrs. Musgrave, Bolton, consists of a valve lever A keyed to the valve spindle, and receiving motion from the rod B, which is provided with a steel catch. This catch engages with a steel piece

Fig. 111.

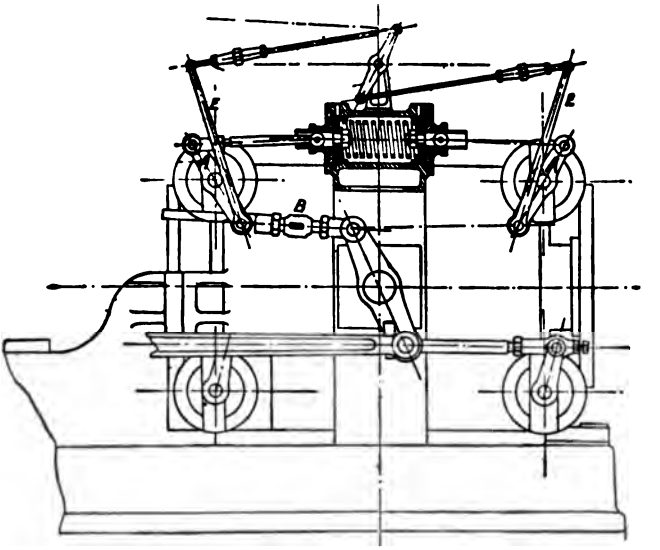

Musgrave's Trip Gear.

on the valve-lever pin supported by the valve lever, but free to move therein. Connected to this spindle is the trip lever E, the

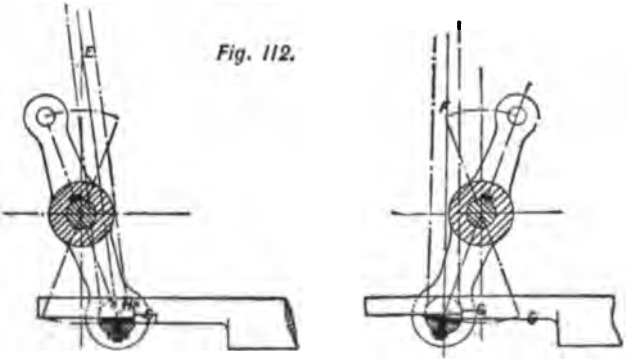

Action of Catches in Musgrave's Trip Gear.

upper end of which is connected to the governor-rods in the manner indicated. The detail of the catches will be better seen in Fig. 112, in which the gear is shown in two positions when set for

the latest trip. At the left hand the catches have just engaged, and the valve begins to move from right to left against the resistance of the dashpot spring. The valve lever continuing its motion causes the steel catch on the spindle gradually to become disengaged from the catch C, because the upper end is held by the governor, and for any one stroke may be considered stationary. In the diagram to the right the mechanism is at the extreme position in the opening direction. The catches are edge and edge and the valve lever is about to be moved by the dashpot, and to occupy the position indicated by the dotted line F G.

The length of the trip lever E is regulated by the depth of engagement, the travel of the valve lever, and the width of the catch on the trip lever.

Let H = distance from centre to edge of catch (see Fig. 112)
B = depth of engagement,
C = length of trip lever,
and D = travel of catch on trip lever,

Then, in order that trip may occur at the latest possible point, the equation $\frac{H}{C} = \frac{B}{D}$ must be satisfied. To find the depth of engagement at the beginning of the valve lever's motion in the opening direction, for any earlier point of cut-off, substitute D′ for D, D′

Fig. 113.

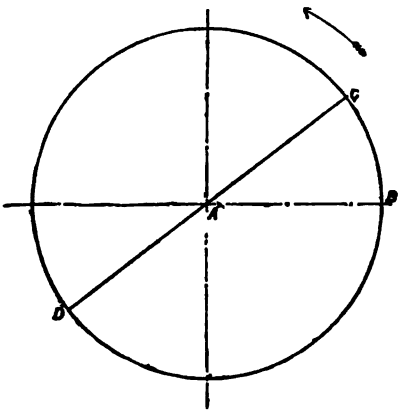

being the movement of the valve lever from the commencement of its travel to the point at which trip shall take place. The value of B for the earliest trip determines the movement of the end of the trip levers, it being equal to—

$$C\left(\frac{B-B'}{H}\right).$$

Here B′ is the depth of engagement for earliest trip. The whole

matter is simply a question of leverage, the length of the trip lever being one arm, and the half width of the catch plate the other.

If the travel of the valves is large the trip levers become inconveniently long, and to avoid this Messrs. Musgrave usually employ double-ported valves, thereby reducing the travel.

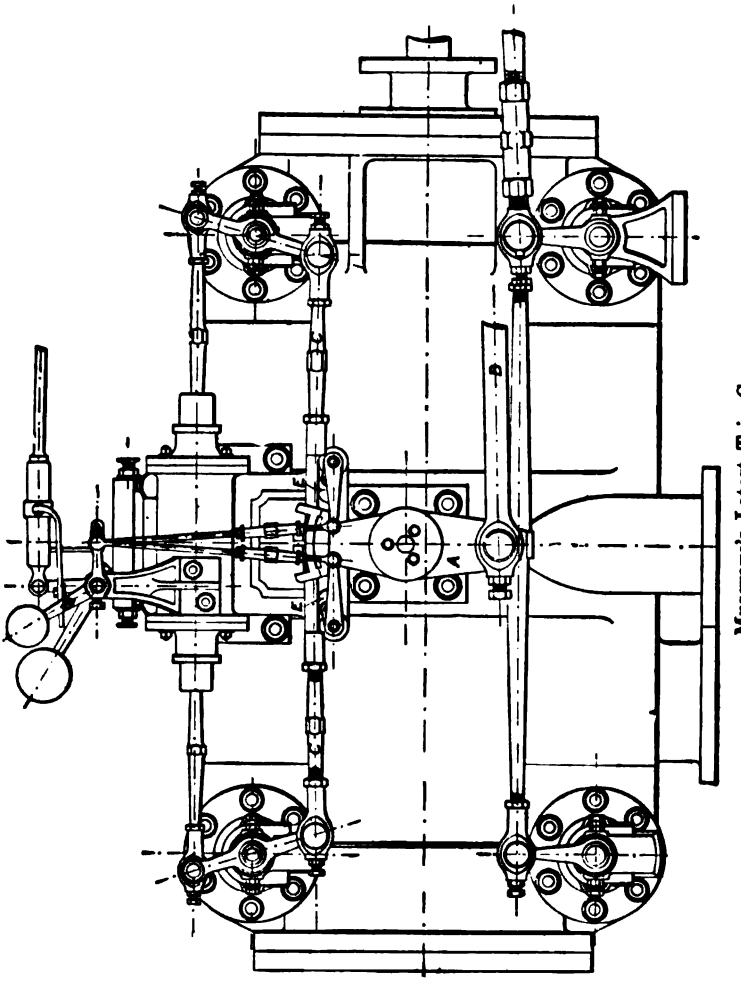

Fig. 114. Musgrave's Latest Trip Gear.

The arrangement just described is known as a "push" gear, because in opening the valve the rod B is in compression. In push gears the eccentric must be directly opposite the proper position for a pull gear under the same conditions. Fig. 113 will illustrate

the matter clearly. A B is the crank and A C the eccentric for a pull gear, but for a push gear A D would be the proper setting. The line A D is an extension of A B. It will be noticed that in Musgrave's gear the eccentric-rod connects to the wrist-plate or its equivalent on the opposite side to which the valve-rods are coupled. This again alters the angle of the eccentric 180°, thus bringing it to A C, Fig. 111.

Musgrave's Latest Trip Gear.—The latest gear made by Messrs. Musgrave is shown in Fig. 114. The rocking arm A, which carries the trip catches, is actuated from the eccentrics by the rod B. The catches on the rocking arm engage with corresponding catches on the push-rods C. The oscillation of the rocker arm actuates the push-rods alternately, and tripping is effected by the push-rods striking the rollers E. As the speed of the engine increases the rollers are raised, and consequently meet the push-rods at an earlier point in the stroke. An automatic knock-off arrangement is fitted, which lifts up the rollers and prevents the catches engaging should the speed exceed or fall below any desired limit. A reference to Fig. 124 will enable the action of this kind of mechanism to be more clearly understood.

The exhaust gear calls for no special comment. The valves are, of course, driven by a separate eccentric, and the valve levers vibrate equally on each side of the central position shown in the illustration.

Wood's Valve Gear.—The Corliss valve gear, made by Messrs. John and Edward Wood, Bolton, is shown by Figs. 115 to 117. This gear possesses several interesting features. Its wearing qualities are exceptional, some engines of this make having run thirty years without any apparent deterioration beyond the wear of the catches and bushes, which are easily renewed. In Messrs. Wood's engines both steam and exhaust valves are at the bottom of the cylinder. This arrangement renders the valve gear readily accessible, even in large engines, whilst the arrangement of the valves insures perfect drainage of the cylinders. Another valuable feature is the accessibility of the buffer springs, and the ease with which they are adjusted. This is specially advantageous in a new engine, which requires stronger springs at first, when the valves have not acquired the glassy surface which appears after a few months wear. Afterwards the compression on the springs can be reduced, and the pull on the gear proportionally decreased.

Referring to Fig. 115, which shows the high-pressure valve gear of the cylinder of a tandem compound engine, the eccentric-rod A actuates the high-pressure driving bar B, a rod from which passes to a similar driving bar on the low-pressure cylinder. These bars are identical, except that the high pressure has a preparation at the back end to receive the rod D. The catch blocks E are carried in a fixing F, which is bolted to the cylinder; and the steel catches are bolted to the catch blocks in the manner shown. The top catches are carried in the blocks G, and are

released at the proper instant in the following manner:—As the catch blocks move inwards to open the steam valves the block H slides up the inclined plane, which has a slope of one in four, and at some point of the stroke depending upon the height of this

Fig. 116.

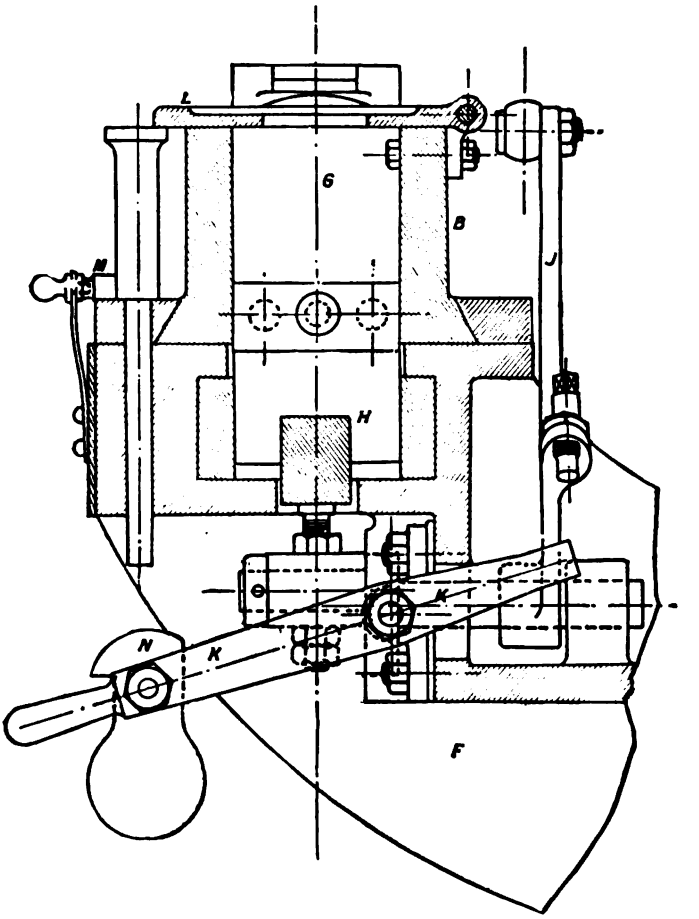

plane, H lifts G, and thus disengages the catches. The valve at once closes under the influence of the buffer springs. The connection between the governor and the inclined plane will be traced from the illustration. The inclined plane is lifted by two small disc cranks, but it will be noticed that the resultant motion on the inclined plane is not a vertical lift, but is upwards and forwards.

This action is utilised to obtain equalisation of cut-off over a wide range, as hereafter explained.

The automatic knock-off gear is very neat and effective. The disengaging levers J have each a finger carrying an adjusting

Fig. 117.

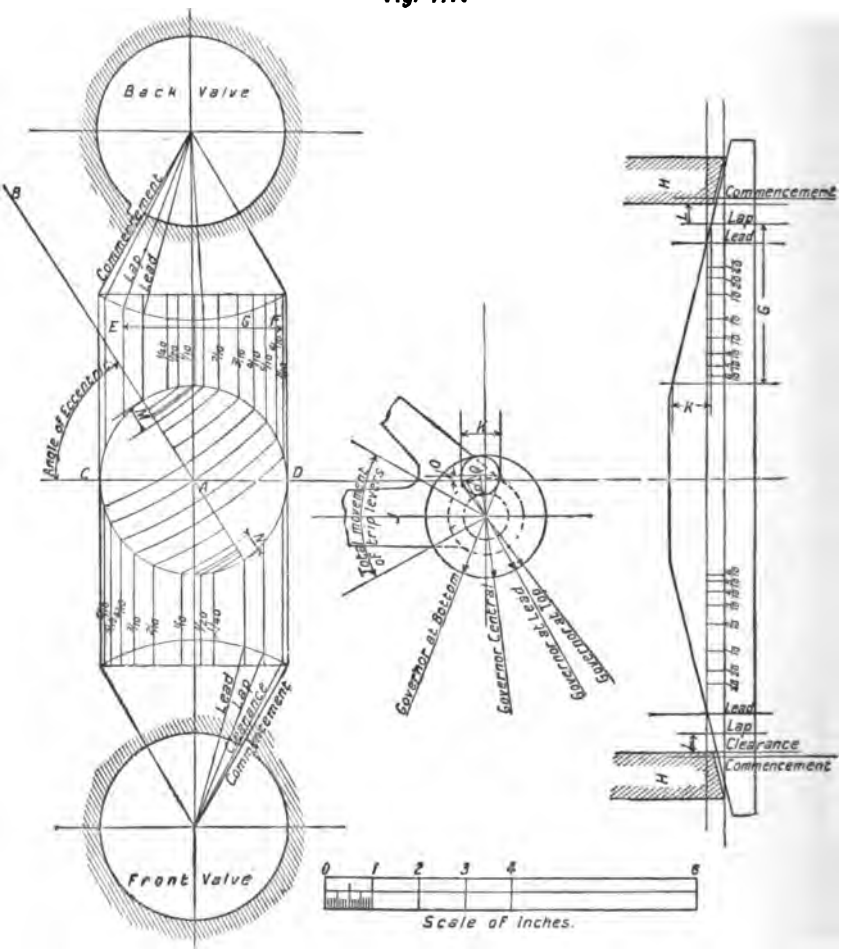

screw or pecker at the end. When the safe limits of speed have been exceeded in either direction, the pecker of one of these fingers strikes the lever K, which lifts the lid L, thus raising the catch blocks G out of gear. The catch M then springs into the lifting spindle, and prevents it dropping until released by the attendant.

The latch N allows the catches to become engaged when the governor is in its bottom position. As the latter rises the catch on N leaves the lifting spindle, and the small unbalanced weight on N brings the circular part of it under the spindle, and it is then ready to disengage should the speed limits be exceeded.

The governor lay shaft is provided with a compensating weight and lever O, which are extremely useful in adapting the governor to its exact requirements. By placing the lever at certain angles it can be made to increase or diminish the sensitiveness of the governor, and by moving the weight in or out the running speed of the engine is varied. It will be observed that if the lever is horizontal when the governor is in bottom position it will have a decreasing leverage as the governor rises, and this will enable the governor to rise to its top position with less increase of speed than otherwise, and hence its sensitiveness is increased. By placing the weight vertically and downwards the opposite effect is obtained. It is thus possible to get a very fine adjustment to suit the exact conditions of running desired.

The exhaust valves, which in all Messrs. Wood's engines are double-ported, receive a positive motion from the eccentrics without the intervention of wrist-plates. Outside bearings are provided for the valve spindles, and steam-tightness is obtained by a coned metallic joint. The whole gear is very substantially made, the catches are of great width, and cross strains on the disengaging levers and catches are avoided.

A valve diagram for the steam valves is shown, and indicates the movements of the steam levers, inclined plane, and governor for various points of the stroke. In the construction of this diagram the movement of the valve levers is first set out, the necessary clearance of catches, lap, and lead determining the angle of advance, as shown. The circle C D is then described, and this is supposed to be the crank-pin circle. On the line A B as centre, with the length of the connecting-rod as radius, the arcs are drawn for piston positions $\frac{1}{40}$, $\frac{1}{20}$, $\frac{1}{10}$, $\frac{2}{10}$, and so on. The inequalities due to connecting-rod influence are clearly shown, and it appears that the latest possible trip is about $\frac{8}{10}$ for the forward stroke, but only $\frac{7}{10}$ on the back stroke. The actual limits permitted are $\frac{7}{10}$ on the forward and $\frac{6}{10}$ on the backward stroke. In actual working a later cut-off than the diagram shows is possible; for, when the engine is running up to speed, the piston may have travelled several inches from the time of the release of the catches to the actual closing of the valve. This fact shows that the pointers which are sometimes fitted to trip-gear engines, and which purport to show the point of cut-off, are necessarily erroneous. The index can only be marked off when the engine is being burred round slowly, when the piston position is practically identical for the release of the catch and closing of the valve. It has sometimes puzzled engineers to find indicator diagrams showing a longer range of cut-off than the gear is apparently capable of encompassing. The explanation is that

the piston is actually travelling as quickly as the closing valve, and moves an appreciable distance between the instant of release and the closing of the valve.

Reverting to the valve diagram, the theoretical limits of the gear over which the governor has control are from the admission at lead to $\frac{7}{10}$ forward stroke; this is between positions E and F of the valve lever = distance G. The slope of the inclined plane is 1 in 4, and therefore the total rise of the inclined plane must be $\frac{G}{4}$ = distance K in diagram. The valve lever positions are then transferred to the inclined plane diagram shown at the right hand of the figure, and the catch blocks H are drawn in the position they occupy when the valves are closed. The inclined plane is shown in the position for earliest cut-off, and when the blocks have been dragged a distance equal to L they will have run up the inclined plane just sufficient to work off the depth of engagement and the clearance between the block and the inclined plane. It is this position which is chosen as the central position of the inclined plane, so that equal leads are given. As the cut-off lengthens the inclined plane must move towards the back end as well as downwards to maintain an equal cut-off at each end, and from the diagram of the disengaging cranks it is evident that this action is obtained. When the governor is central the theoretical cut-off is a little later than $\frac{1}{10}$. The inequality of piston position is then the difference between distances M and N, and, therefore, the inclined plane should be thrown from the central position a distance equal to half this difference = O in disengaging crank diagram. The radius of the disengaging crank being known, an arc is drawn to pass through the two points P and Q, and this determines the position of the crank pin in relation to the lever J. By this construction an equalisation of cut-off is obtained over a wide range. Marks are cut in the disengaging cranks as shown, and the erector adjusts the trip-rod accordingly.

Inglis and Spencer Slip-rod.—The well-known Inglis and Spencer slip-rod, the construction of which is shown in Fig. 118, has established itself as a simple and reliable form of trip gear. The end A embraces the wrist-pin and carries the spring clips C C, which are secured by bolts as shown. The end B telescopes on this piece, and is provided with steel catches to engage with the pieces on the clips. The eye D is coupled to the valve lever. Tripping is effected by the toe lever E forcing open the steel clips and releasing the catches. The upper end of the toe lever is under the control of the governor, and by its inclination to the slip-rod determines the point of tripping. It will be seen that when the slip-rod moves in the direction from B to A and the upper end of the toe is stationary, the result is to cause the head of this lever to move round on its centre, and in so doing force open the clips. The piece B then springs forward in consequence of the pull of the dashpot on the opposite end of the valve lever to which B is con-

nected, and thus the valve is closed. The part B is then stationary, but A, being connected to the wrist-plate, continues its motion until the catches on the clips move past the catches on B, so that engagement takes place, and the whole rod moves together. To prevent noise during engagement the clips are provided with leather pads, which, falling on B, prevent any metallic click that would otherwise occur.

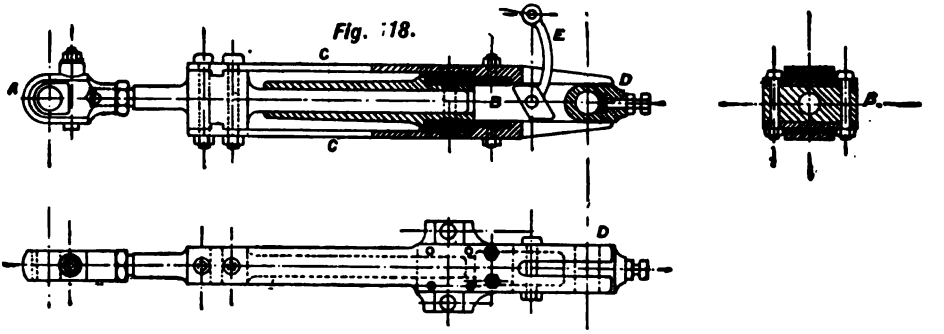

Inglis and Spencer Slip-rod.

Arrangement of Inglis and Spencer Trip Gear.—The annexed folding plate shows the practical application of the above form of trip gear. The makers are Messrs. Hick, Hargreaves & Co., Bolton. Separate eccentrics and wrist-plates are employed for the steam and exhaust valves, thereby allowing of a wide range of trip. The Inglis and Spencer slip-rod is clearly shown, and also the connection of the toe levers to the governor. The trip-rods are made to move in equal and opposite directions by toothed sectors fastened to the spindles on which the levers carrying the trip-rods are secured. The sectors, which do not appear in the engraving, are situated under the dashpot. The gear is shown set for the latest trip, the back steam valve is wide open, and the toe lever is about to release the clips in the manner previously described. The rectangular projection on the dashpot levers is for lifting the catches into gear on starting the engine. The socket end of the lever lying near the foot at the back end of the cylinder fits the projections on the dashpot levers, gives the attendant sufficient leverage to overcome the resistance of the dashpot spring and bring the catches into gear, or a square is sometimes formed on the valve spindle and a suitable key provided to fit it, as is done in the engine figured in the frontispiece. The exhaust portion of the gear calls for no special remarks, being the usual arrangement adopted when wrist-plates are employed.

Pollit & Wigzell's Gear.—In the gear made by Messrs. Pollit & Wigzell, Limited, motion from an eccentric is given to a cast-iron disc or wrist-plate oscillating on a fixed pin placed

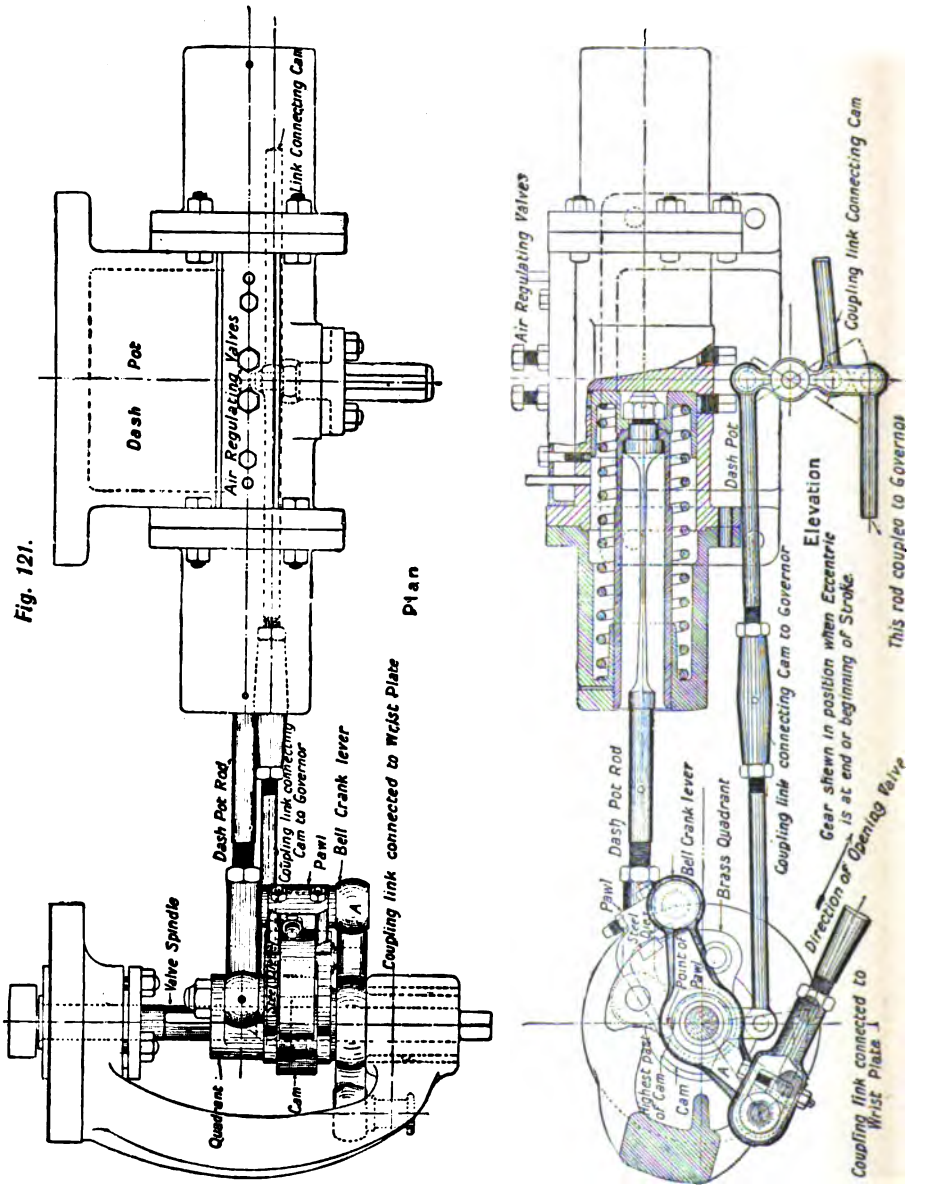
Dash Pot
Air Regulating Valves
Link Connecting Cam
Valve Spindle
Dash Pot Rod
Coupling link connecting Cam to Governor
Pawl
Bell Crank lever
Coupling link connected to Wrist Plate
Quadrant
Cam
Plan
Air Regulating Valves
Coupling link Connecting Cam
Dash Pot
Elevation
Dash Pot Rod
Pawl
Bell Crank lever
Brass Quadrant
Coupling link connecting Cam to Governor
Gear shewn in position when Eccentric is at end or beginning of Stroke.
This rod coupled to Governor
Direction of Opening Valve
Point of Pawl
Highest part of Cam
Cam
Coupling link connected to Wrist Plate I

Fig. 121.

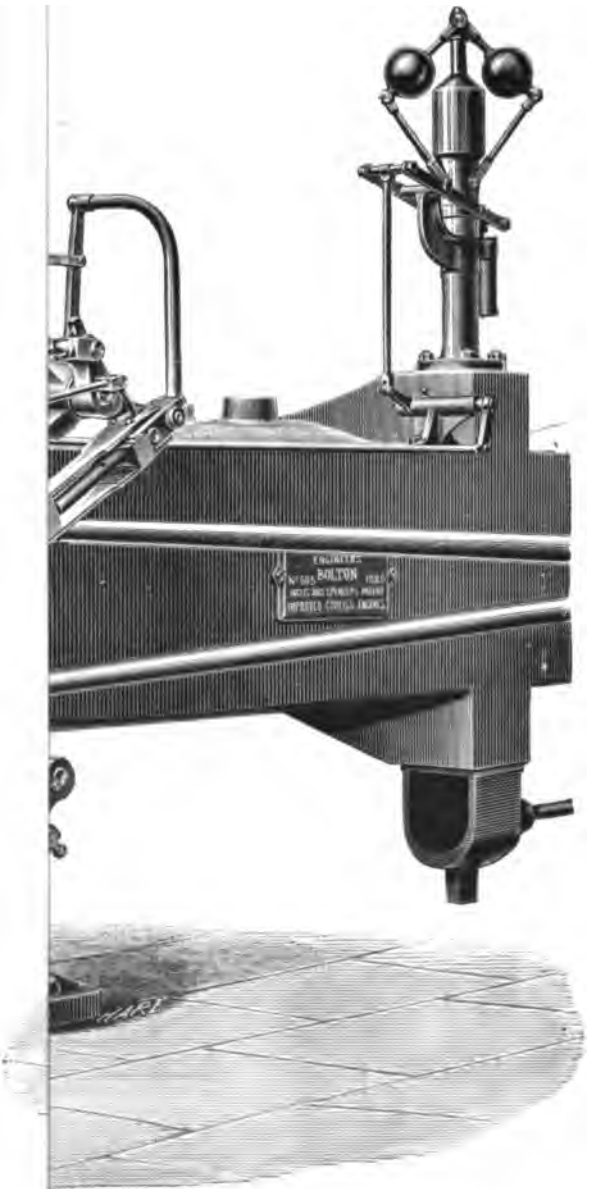
BOLTON

PLATE V.

Fig. 120.

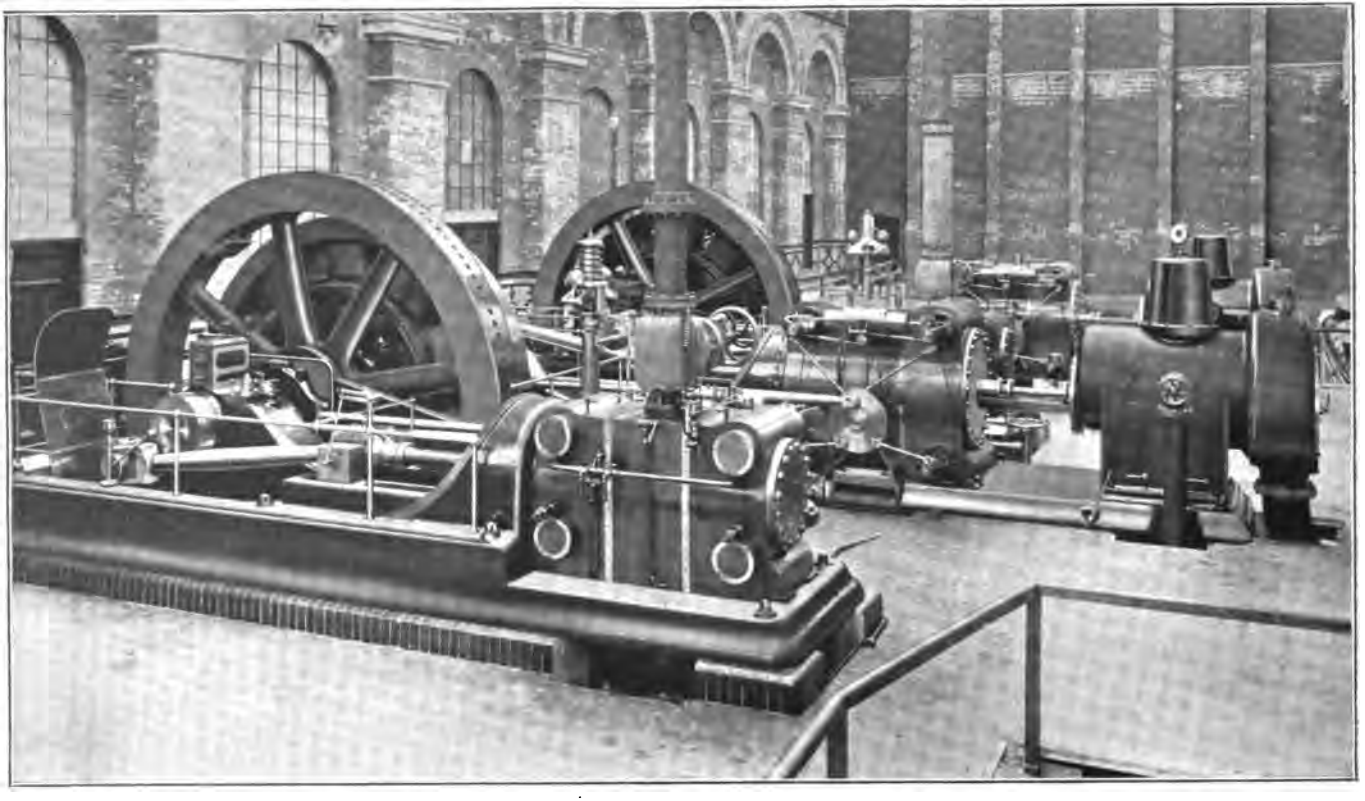

Pollit & Wigzell's Gear.

below the centre of the engine and centrally between the two steam valves (see Plate v.). This disc is again connected to the gear of each valve by means of an adjustable coupling link. The valve gear proper (see Fig. 121) consists of a bell crank lever A, which is loose on the valve spindle, and to one end of which is connected the coupling link from the disc or wrist-plate, the other end of the bell crank lever supporting a pawl having on the underside a steel die which gears with another steel die on a brass quadrant keyed to the valve spindle. Between the sides of the quadrant, and swinging loose on the valve spindle, is a cam with a lever attached to couple to the governor. The function of this cam is to regulate the point at which the steel tripping catches are released. The point of the pawl rests on the face of the cam, being kept in position by a spiral spring, not shown, and in its motion as it passes over the highest part of the cam is lifted out of gear with the steel die of the quadrant.

Placed between, and nearly on a line with the steam valves, and fixed to a bracket on the cylinder is the dashpot, which consists of a double cylinder, each end of which contains a piston and a flattened rod coupled to a pin fixed on the outside of the brass quadrant previously mentioned. At the front of each dashpot piston is a spiral spring, so that any motion given to the piston must compress the spring.

The action of the gear is as follows:—Just before the crank reaches one of the dead centres, and the steam valve at that end is ready for opening, the valve gear will be in such a position that the two steel dies are just ready to engage with each other, and the dashpot piston will be at the end of its stroke with the spring fully extended.

As the bell crank lever receives motion from the central disc, the steel die of the pawl engages in gear with the steel die of the quadrant, and the lever, therefore, carries the quadrant with it in its motion, thus opening the steam valve, and, at the same time, drawing forward the dashpot piston and compressing the spring. This action continues until the point of the pawl slides up the highest point of the cam, and is lifted out of gear with the quadrant. Then the dashpot spring extends itself, carries the quadrant back to its original position, and closes the valve, whilst the bell crank lever continues its motion to the end of the stroke.

The governor in its varying planes moves the cam into position so as to release the catches sooner or later as required by the load on the engine. The dashpots are fitted with air regulating valves to prevent hammering action on the part of the dashpot pistons.

Dobson's Trip Gear.—Dobson's trip motion is illustrated by Fig. 122. The sliding piece A is carried by a bracket fixed to the side of the cylinder. This sliding piece receives its motion from the eccentric which couples to pin B. At each end of A are the trip boxes C, carrying tripping pieces E, and trip levers D. The latter are connected to each other and to the governor in the

manner shown. At certain periods the tripping pieces engage with steel catches secured to the hollow spindle F, and by their engagement drag F and the dashpot piston secured thereto against the resistance of the dashpot spring. The upper ends of levers D are

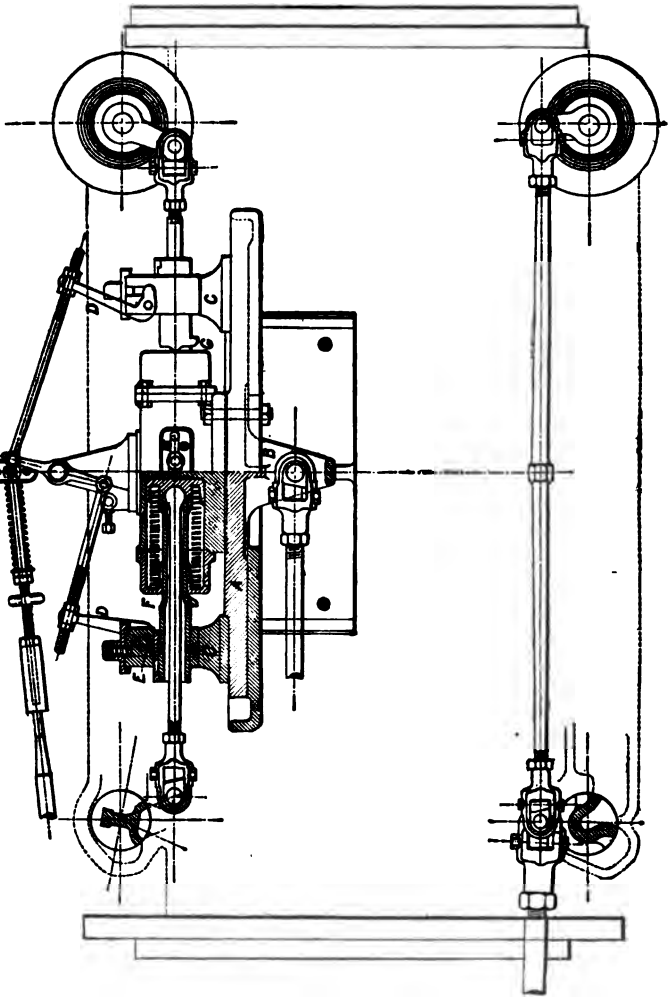

Fig. 122. Dobson's Trip Motion.

anchored on the beam lever, which is in turn connected to the governor; and the effect of A sliding to and fro is to cause these levers to oscillate on their centres, thus raising the tripping blocks E and causing liberation. The illustration shows the slide A in

mid-position, and both steam valves are closed. Assuming one set of catches are engaged, any movement of the upper ends of the trip levers D in an outward direction would delay liberation, whilst movement in the opposite direction would hasten it. The projections G are provided in case of failure of the buffer springs, for on the return stroke of the slide A the valves would be closed

Fig. 128.

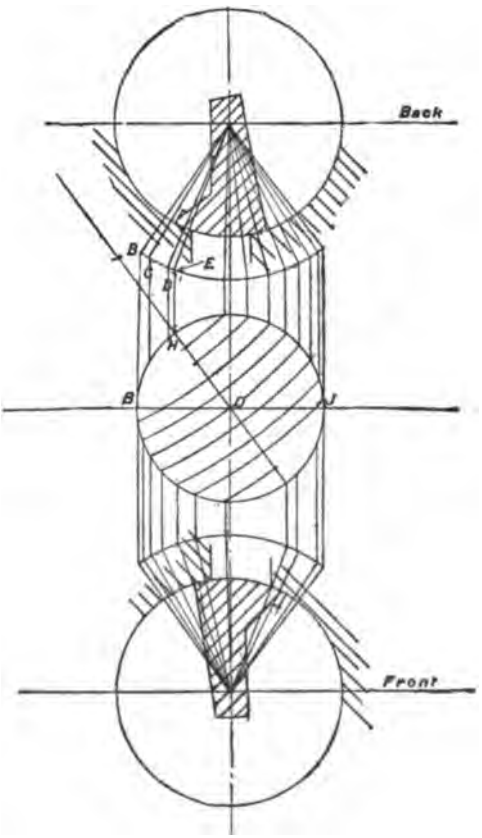

positively, and thus prevent high-pressure steam rushing to the low-pressure cylinder, thereby giving a dangerous excess of speed, besides throwing stresses on the engine which it is not designed to resist. The omission of such a detail has, in some cases, caused disastrous breakdowns; for unless the high-pressure steam valves are closed when a spring breaks nothing can prevent high-pressure steam reaching the low-pressure piston.

Valve Diagram for Same.—The valve diagram shows the motion of the steam valves for both back and front ends. Starting at point B (Fig. 123) for the back steam valve, the motion from B to C is taken up by clearance of trip catches. Lap is then worked off and the valve opens, and at D the admission commences. From D to E on the arc of the valve lever is lead, and the projection of E to the circle indicates the position of the eccentric when crank is on dead centre. Let H be the projection of E, and let O H be produced indefinitely. With centre on O H produced, and with a radius which bears the same ratio to the radius of the circle B H J as the connecting-rod bears to the crank, describe arcs for any convenient number of crank positions. Where these arcs intersect B H J project lines to the arc of the valve lever pin. (See the accompanying figure.) The port opening for any crank position is then at once read off. In the present case, the range of trip is seen to be from J to H, about 75 per cent. The port opening at one-tenth stroke is $1\frac{1}{2}$ inches; at two-tenths, $2\frac{1}{4}$ inches; at three-tenths, $2\frac{3}{4}$ inches; and so on. The unequal distribution due to connecting-rod influence causes the range of trip for the back stroke to be somewhat less than for the front stroke. The diagram shows this. The necessary movement of the trip levers to encompass the full range of the gear may be found from this diagram. Suppose the range of trip is from the beginning of lead to $\frac{7}{10}$ on the forward stroke. The positions of the valve lever for each point can be read off from the diagram, and the angles between the two lines indicating these positions is the total angle through which the trip levers must be moved. The truth of this statement will be verified by drawing the gear in the two positions, and plotting the trip levers down to give release at these positions.

Knock-off Gears and Vacuum Breakers.—In high-class Corliss engines it is often necessary to fit an automatic knock-off gear in connection with the governor, so that should the speed of the engine exceed or fall below certain limits the trips will be thrown into such a position that will prevent engagement of the catches, the result being that both steam valves remain closed, and the engine thus brought to rest. Dangerous excess of speed might be caused by a breakage of the driving belt or ropes, or a fracture of the main driving shaft. On the other hand, failure of the governor driving gear, seizure of one of the main bearings, or the presence of any obstacle in the main drive, would probably cause the governor to fall below the normal plane. Fig. 124 illustrates a neat form of knock-off gear, and is the type employed in the engine shown in the frontispiece. The rod A is actuated by the governor, and in turn moves the trip lever B in the usual manner. The end of A is carried in a long socket, and is notched to receive the catch C. When this catch is engaged in the notch, as shown, the whole moves as a solid rod, but when the trigger D strikes either the finger E or F the catch is lifted out, and the coiled spring flies out and drags the top arm of B to the left,

which prevents the catches engaging. The fingers E and F are carried in slots, and by adjusting their position the knock-off can be made to operate at any desired speed above or below the normal. The finger F is removable, so that on stopping the engine the governor can descend to the bottom position without disengaging the catch. On starting again, the finger is replaced after the engine has attained normal speed. In the example in question the spring exerted a thrust of 85 lbs. on the socket at the instant of release, and this force was found sufficient to move the trips very suddenly. Stops should always be provided to prevent the spring forcing the trip levers too far. Sometimes a weight is employed in place of a spring, but the arrangement is not so compact as the present example. A vacuum breaker is included in the arrangement, to prevent the engine working with the vacuum after the steam valves are closed. The valve G is screwed on the end of a line of small pipes leading to the condenser. After the catch C has been released the finger H lifts the vacuum-breaker valve, and air rushes down the pipes to the condenser, thus destroying the vacuum. A vacuum breaker, it may be remarked, should always be fitted to knock-off gears on condensing engines.

Fig. 124.

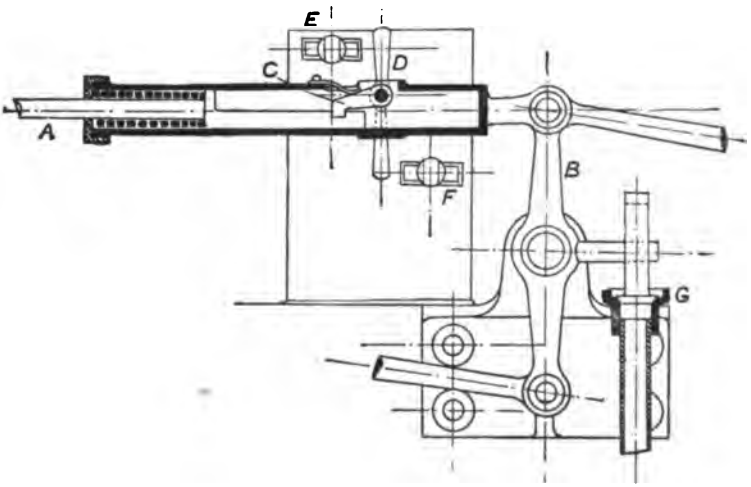

Knock-off Gear and Vacuum Breaker.

Goodfellow's Gear.—Benjamin Goodfellow, of Hyde, Manchester, constructs a trip motion in which catches are dispensed with altogether. In his arrangement a knuckle joint is the device employed, and tripping is effected by the knuckle doubling up and leaving the valve to the influence of the dashpot. The rod E (Fig.

125) receives its motion from the eccentric-rod without the intervention of a wrist-plate. The levers F F slung from brackets on the valve bonnets carry this rod, which is provided with a preparation for carrying a piece D. This piece forms the centre for the tripping finger. The double-ended valve levers C C are connected to the dashpot on one side, and to the piece D through the medium of the knuckle joint formed of the levers A and B. In the figure, the gear is shown in the extreme position, and it will be seen that the knuckle for the back end is nearly straight. Any movement of E in the direction of the arrow will give an equal movement to the valve lever at the back end, because the central pin of the knuckle is slightly below the line connecting the two extreme pins, and the knuckle is prevented from doubling in a downward direction by a protuberance on the brass link A which rests upon the carrier rail E. The forward motion of the valve lever will continue until the tripping finger N, which forms part of the link B, comes in contact with the tripper M. When this occurs the knuckle at once closes up, and assumes a position similar to that shown at the front end. The trippers M are under the control of the governor, and by their position determine the point of cut-off. The hole in the brass link A is made larger than the pin of the valve lever which it embraces. The object of this clearance is to allow the centre joint of the knuckle to fall below the other joints, so as

Fig. 125.

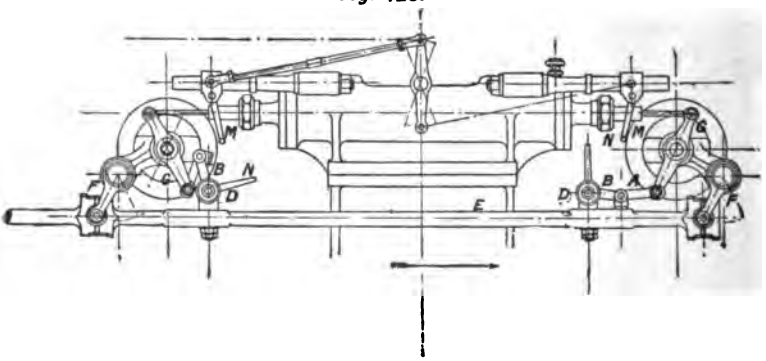

Goodfellow's Gear.

to ensure no doubling up unless the trip finger is struck by the tripper. This play in the link corresponds to the clearance of ordinary trip gears. A leather pad on the link A deadens the noise when the gear attains its extreme position and the link falls on the carrier rail.

The method by which all plucking action on the governor due to the tripping lever striking the finger is avoided is very ingenious. The trip lever is hinged from the sliding collar, and is provided

with stops on its upper end, which, whilst allowing the lever a little free play, prevent it swinging out of the way of the finger. The effect of M and N striking is not to slide the collar along the spindle and thus pluck the governor, but to cause the trip lever to bind on the under side of the sliding collar.

A later form of trip gear made by Messrs. Benjamin Goodfellow, Ltd., is shown in Fig. 127. The carrier rail A is actuated by the steam eccentric-rod and on the carrier levers B, which are suspended from the bridles, and are not connected to the valve spindles. The carrier rail carries two cast-iron trip boxes C, which are secured in position by hexagon nuts, and are prevented from turning by feathers on the carrier rail. These trip boxes carry the catches and the trip cams, and support the ends of the die-rods D. The double-ended levers E are keyed to the valve spindles, and are connected with the dashpot-rods on one end and with the die-rods on the other. Starting with the carrier rail in extreme position to the left, the left-hand dashpot piston will be home, and as the carrier rail moves to the right the clearance of the catches is first taken up, after which the die-rod will be dragged with the carrier rail. At a certain point, determined by the position of the trip cam F, the die-rod is lifted clear of the catch piece G, thus allowing the dashpot to close the valve. The die-rod has a loose hardened-steel catch piece that engages with G, and is also provided with horns H, so that should the dashpot fail to close the valve, either through failure of the spring or sticking of the valve, the trip boxes will do so on their return stroke. The catch piece G is circular where it fits into the trip

Fig. 126.

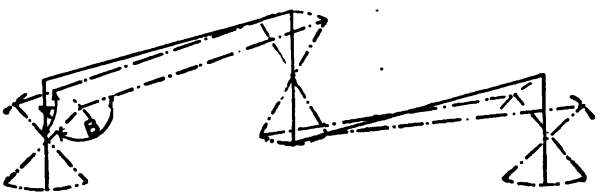

box, and is prevented from turning by set screws. The section of the trip cam is a sector of 120°, the edges being well rounded. In the first gears that were made springs were provided to assist the die-rods dropping into place, but it was soon found that the weight of the die-rod itself was sufficient to ensure engagement up to 100 revolutions per minute, and the edges of the catches being very slightly undercut, effectually prevents disengagement except at the proper instant. In vertical engines springs are, of course, necessary to keep the die-rods in gear.

The length of the trip levers is important. If too short the working angles become unsuitable for easy running, and if too long they are unsightly, and the lifting out of the die-rods is

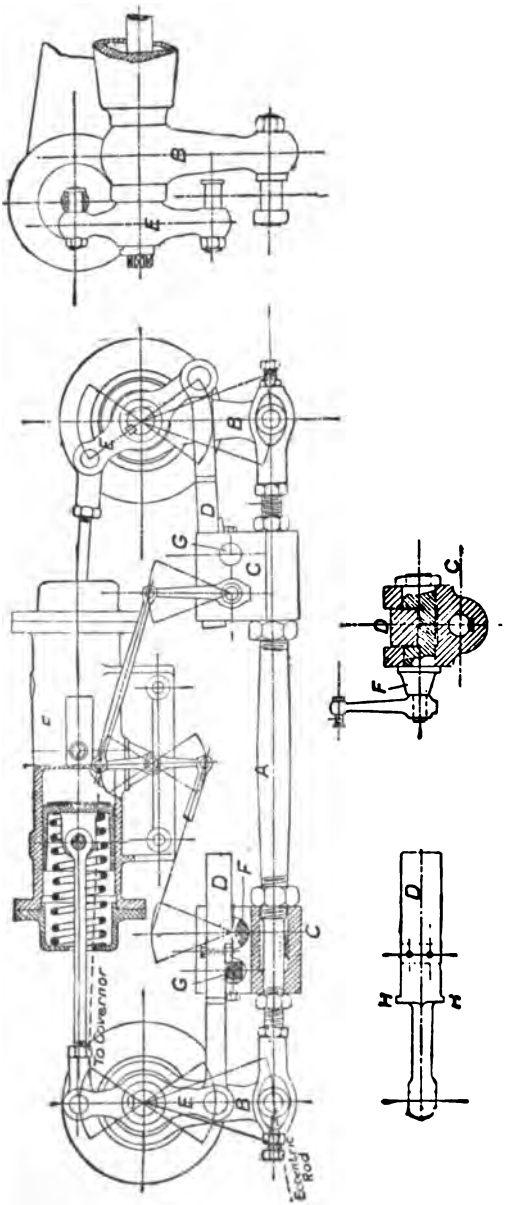

Fig. 127.

Later Form of Goodfellow's Gear.

sluggish. As the action of the trip levers is similar to others, it will be well to consider it minutely. The worst positions are when the carrier rail is at the extreme limit of its movement in one direction, and the end of the trip levers in their extreme position in the other. Referring to the diagram (Fig. 126), in which extreme positions are shown by dotted lines, it is evident that a lever much shorter than that shown will, with the amount of travel indicated, give unworkable angles. The Angle A is not greatly affected by wear in the pins or a slight adjustment of the trip boxes, but a slight alteration or wear would seriously affect the angle B, and render a double-up possible. This angle, therefore, should not exceed 140°, whilst A should not be less than 22°.

Governor and Trip Gear Design.—It is highly important that all the levers and pins connecting the governor with the trip gear should be quite easy, otherwise satisfactory governing is impossible. A little play in the pins is no objection provided the linkwork is properly designed. Referring to Fig. 128, which

Fig. 128.

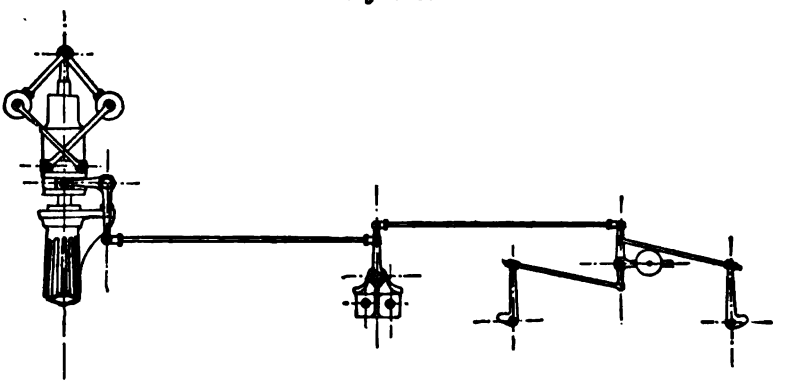

shows the linkwork between a governor and trip gear of a Corliss engine, it is evident that by placing a weight in the position shown the stresses in the rods are constant in direction, and the pin-holes might be slots without introducing any lost motion. This is a useful point to remember, because many cases of defective governing have arisen through pins being made too tight through fear of introducing lost motion; and, in other cases, slackness in the joints has been permitted without any attempt to eliminate lost motion. Other important points are to have the opposite arms of the governor of exactly the same length, the balls of equal weight, and the pins disposed symmetrically about the axis of revolution. If these conditions are neglected there will be disturbing effects on the centre weight which may cause undue friction on the central spindle and thus prevent effective governing.

Provided a governor is sufficiently stable to resist the plucking action of the trip gear, it will give better results with a short lift than a long one; but with short lifts it becomes increasingly important that lost motion be eliminated. Suppose that there are two governors exactly alike in every particular, except that one moves the trip gear through its full range with a lift of 3 inches, whilst the other encompasses the full range with 1 inch of lift, the governor with the short lift would regulate the speed within one-third the limits of variation given by the other, assuming that equal increments of speed produced equal rises of the governor, and that the inertia of the revolving mass on the crank shaft was sufficient to render such closeness possible.

The expression "too sensitive" is often applied to governors. It is an erroneous term; for a governor which is master of its valve gear cannot be too sensitive. Hunting governors, which are often said to be too sensitive, are in reality too sluggish for their duty, and the cause of their hunting is frequently found to be due to the inertia of the centre weight, the effect of which continues beyond the time at which the right position of trip has been given. With a rapidly and widely varying load a very sluggish governor with a large lift will develop this defect. When this trouble occurs an oil cylinder is often applied to smooth down the excessive hunting; but a well-designed apparatus should need no appliance of this nature.

For very fine governing geared drives are better for governors than ropes or belts, as these flexible connections fail to transmit sudden changes of speed with sufficient precision. It is also good practice to drive the governor directly from the crank shaft rather than from a cam shaft, as the shock of the valve gear is liable to be transmitted to the governor, which, as a consequence, will develop dancing.

The above remarks on governor gear apply equally to gas engines, air compressors, and, in fact, to all classes of machines in which governors are employed.

It will be convenient to conclude this chapter with a few remarks on dashpots.

Dashpots.—The vacuum dashpot shown by Fig. 129 rests upon a cast-iron plate secured to the engine foundations. The dashpot-rod connects to the pin A, and lifts the plunger B, thus forming a vacuum between it and the casing C. Tightness is obtained by the leather ring D secured in position by a circular nut. The small valve E is free to move in one direction only, and allows air to escape from the vacuum chamber into the atmosphere. F is the cushion chamber, the object of which is to prevent the dashpot closing violently. The cushion part of the plunger is provided with a leather pad which falls on a pad fastened to the bottom of the cushion chamber. When the piston descends, the small valve G regulates the escape of air from the cushion chamber with the greatest nicety, and renders the action practically noiseless.

The diagram of the spring dashpot is self-explanatory, and it only remains to say that the valve A regulates the cushioning of the piston in the manner already described.

Fig 129.

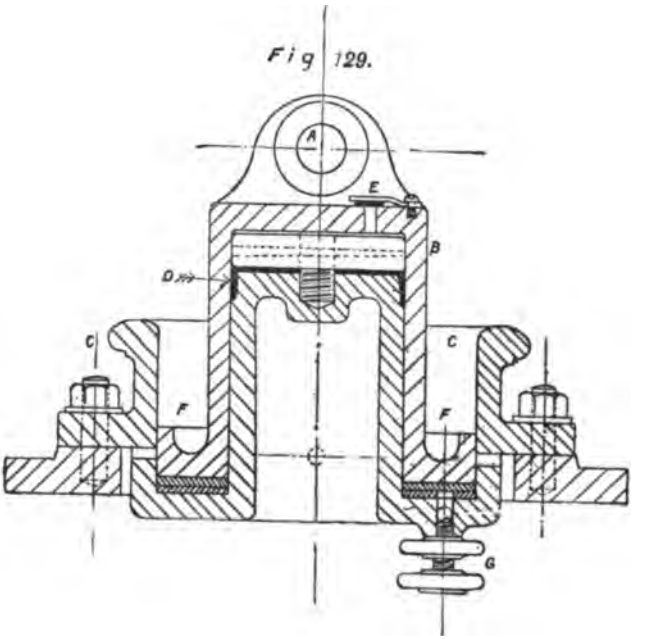

Fig. 130.

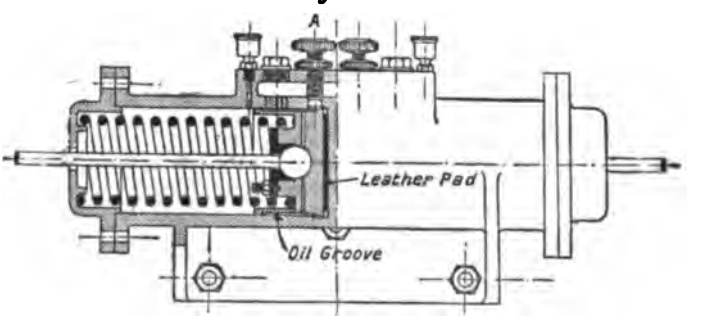

Spring Dashpot.

A vacuum dashpot is not suitable for a double-eccentric gear, because the small movement of the valve lever from engaging position to admission point does not raise the plunger sufficiently to produce a good vacuum. There must be some clearance in the vacuum chamber, and therefore the degree of rarity of

the atmosphere therein is proportional to the lift. In double-eccentric gears the valve movement for early cut-off is very small, and is insufficient to secure prompt action of the dashpots; but with single-eccentric gears, the dwelling and lap angles must always be worked through before steam opens, so that even at the earliest cut-off the dashpot lever lifts a considerable amount. With a spring dashpot, an initial tension or compression can be given, which will close the valves promptly at all grades of expansion.

Dashpot Springs.—The strength of dashpot springs is a subject on which engineers differ considerably, and, indeed, the question is one of individual judgment and experience and not one of exact calculation, the influencing factors being numerous and only approximately known. The friction of the stuffing box and the coefficient of valve friction can only be assumed, and these are the chief factors to consider.

The following table has been compiled from the writer's experience, and gives the strength of springs for a wide range of sizes. The examples are all from actual cases which have proved satisfactory in working:—

Diameter and Length of Valve.	Boiler or Steam Chest Pressure.	Length of Dashpot Lever.	Nature of Spindle Packing.	Force exerted by Spring when Valve is Closed.
Inches.	Lbs.	Inches.		Lbs.
3½ × 16	120	2¾	Hemp.	108
4½ × 21	150	3½	Cone metallic.	120
5 × 26	60	3½	,,	126
5 × 27	200	3¾	Hemp.	195
6½ × 39	105	4⅛	,,	200
8 × 65	38	5	,,	260
6 × 34	120	4½	Coned.	180
7 × 42	70	4½	,,	200
9 × 69	30	5½	Hemp.	278

The springs should be as long as convenient, in order that the closing pressure may not be excessive when the gear is working on late cut-off. One of the difficulties met with in the running of Corliss gear is to obtain prompt closing at early cut-off without hammering at the late cut-off; for if the spring be only strong enough to close the valve when the latter is wide open, and practically in equilibrium, it will be too weak to close it promptly at a very early cut-off when the spring has less compression upon it. Another objection to a short spring is that the force required to lift the catches out of gear varies greatly between the earliest and latest cut-off, and may cause some disturbance to the governor. The advantage of a long spring is therefore obvious.

The examples are all from engines with double eccentric gears.

and with laps varying from $\frac{3}{16}$ to $\frac{1}{2}$ inch. In single eccentric gears it has been found that a stronger spring is required; and the reason is that the valves when open are nearly in equilibrium, and the springs give considerable momentum to the valves, which is quite sufficient to carry them home the short distance they cover the port at the extreme point of their travel; but in single eccentric gears the springs must move the valves over the dead angle as well as the lap, and it is well known that when the valves are closed they require most power to move them.

CHAPTER VIII.

SINGLE ECCENTRIC GEARS WITH LARGE RANGE OF TRIP.

CONTENTS.—Frikart Single Eccentric Gear—Valve Diagram for Frikart Gear—Farcot Gear—Features of Cylinder—Wheelock Gear—Size of Tripping Catches—General Remarks.

THIS chapter deals with several gears which form exceptions to the rule that tripping can only take place when the eccentric is moving in the opening direction.

Frikart Single Eccentric Gear.—The first gear to notice is that invented by Frikart, and made under license by Messrs. Greenwood & Batley, Leeds. The peculiarities of this gear permit of

Fig. 131.

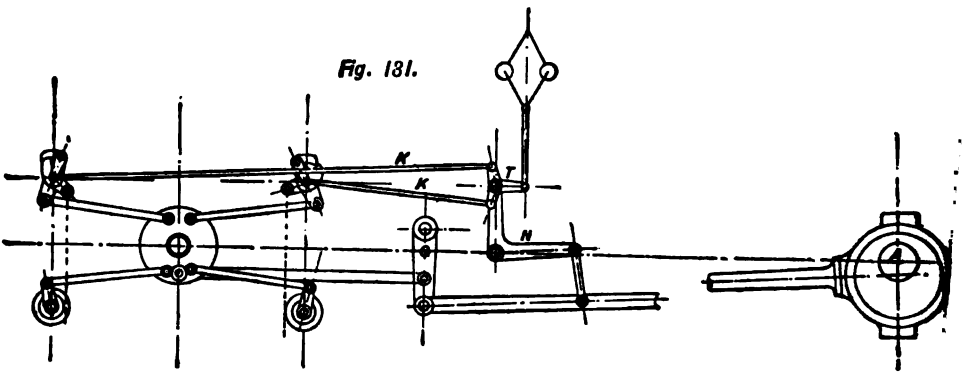

Frikart Single Eccentric Gear.

both steam and exhaust valves being operated by one eccentric, whilst giving a range of trip up to 75 per cent., or even later. Another advantage is that in consequence of engagement being positive—that is, not relying upon springs to bring the catches into gear—the motion is adapted to speeds quite unsuitable for ordinary trip gears.

In order to understand the action of the trip itself, it will be necessary to consider the arrangement of the rods and levers. In the diagrammatic sketch, Fig. 131 A is the crank shaft on which is keyed the eccentric, giving motion to the wrist plate through the swing lever G. The wrist plate communicates its motion to the exhaust valves in the usual manner; but the steam valves derive their motion through the medium of several levers. The detail of

the trip is shown by Figs. 132 and 133. The two levers A and B oscillate upon the valve spindle, the wrist-plate lever A being loose, and the dashpot lever B keyed on. Swinging on the upper end of A is the tripping lever and catch C, which at certain periods,

Fig. 132.

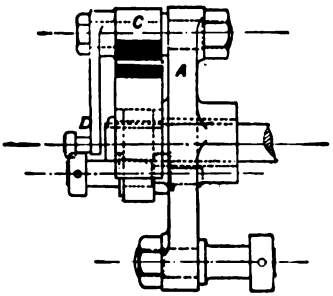

Fig. 133.

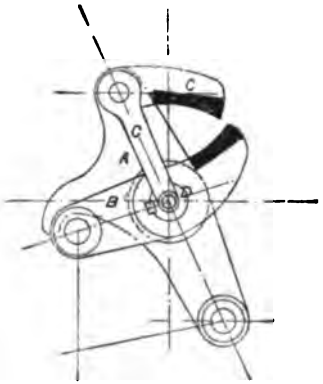

Frikart Single Eccentric Gear.

engages with the dashpot lever. C is so constructed, that when the centre of the pin D coincides with the centre line of the valve spindle, the dashpot lever is free to descend and cut off steam. Fig. 134 shows the gear in another position, where the centre of the trip lever pin is not coincident with the centre of the valve spindle; and where the dashpot lever is being raised because of the engagement of the trip lever with it.

Fig. 134.

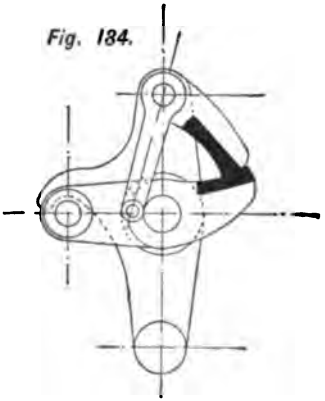

Reverting now to Fig. 131, the motion of the trip levers will be understood. From a suitable point on the eccentric-rod, the lever N receives motion. N in turn operates the levers K by means of the three-armed lever T. The governor connects to T by means of swinging links, and by its position determines the inclination of the three-armed lever. The latter has a constant motion from the eccentric-rod, so that the governor does not regulate the amount, but simply the position of that motion. The levers C are thus seen to be under the influence of three movements. In the first place they are carried round by the wrist-plate levers; the second motion is derived from the levers K; whilst the governor, as before stated,

regulates the position of the lever T, and consequently the time at which the trip lever pin coincides with the centre of the valve spindle.

The lever A (Figs. 132 and 133) is so formed that in case of the dashpot sticking, the lever B will be forced to descend by coming in contact with the projecting part of the wrist-plate lever. With this arrangement there is no fear of the steam valve remaining open throughout the stroke, even if the dashpots fail to act.

Valve Diagram for Frikart Gear.—The motion of levers K is equivalent to that which would be derived from an eccentric set at right angles to the eccentric A (Fig. 131), and remembering this, it is easy to construct a diagram showing the action of

Fig. 135.

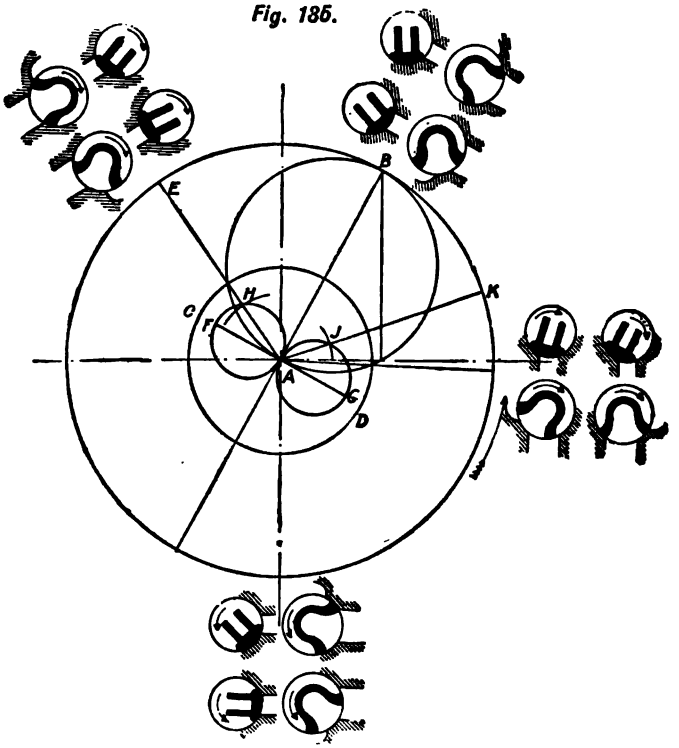

Valve Action shown for latest Trip.

the trip levers very clearly. In Fig. 135, the position of the eccentric is given by the line A B. C D is the lap circle, and cut-off is therefore at A E. So far, the diagram is similar in every respect to the diagram for a slide valve, with the same lap and angle of advance. At right angles to AB, draw the line F.G, equal to the travel of the trip levers due to the levers K; and on F G describe the circles as shown. When the governor is revolving in its normal plane, the coincidence of D (Figs. 132 and 133) with

the valve spindle occurs when the crank is at A B, and cut-off is at this point. Suppose the governor to fall and move the centres of the trip-rods a certain amount. With this amount as radius, describe an arc cutting the polar circles at H. Produce A H, which in this instance falls on the line A E. Tripping now takes place at A E, the point where the valve closes by virtue of its lap and movement from the wrist plate. Suppose the governor rises and moves the trip levers in the opposite direction. Then the intersection of the circle whose radius equals the amount of displacement with the polar circles indicates the position of cut-off. In the diagram, A J represents the displacement, and tripping is seen to be at A K.

Diagrams of the movement of the steam and exhaust valves are given by Fig. 136; that to the left being the steam diagram, and the right hand the exhaust. Referring to the steam diagram, it is seen that full port opening is attained at 10 per cent. in the stroke; a result which must be considered very satisfactory. The peculiar concavity of the exhaust diagram at A indicates that the disposition of the wrist-plate pins and exhaust

Fig. 136.

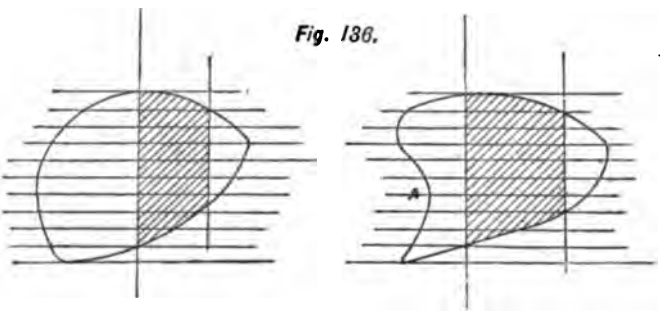

valve-rods is faulty, insomuch that there is a double reversal of stress on these parts. The diagrams owe their irregular form to the presence of the wrist-plate, which modifies the motion so that the valve movement is no longer represented by an ellipse.

Farcot Gear.—The Farcot gear is another example of a single eccentric motion giving a wide range of trip. This gear was illustrated and described in *Engineering* some time ago, and the following description and cuts are taken from that source. (See Folding plate):—

"The general arrangement of the valve gear is shown by Fig. 137, while Figs. 138 to 141 represent the cut-off gear in detail. As will be seen from the general view, but one eccentric is used, this giving motion to a wrist plate, which is connected by rods *c* to levers *d* mounted loose on the admission-valve spindles (see Figs. 139, 140, and 141). The lower part of each lever *d* carries a catch *f* which is constantly drawn towards the valve spindle by a spring.

Upon the valve spindle is keyed an arm *g*, which is acted upon by a spring tending constantly to close the valve, and which, on the other side of the valve spindle, carries a steel catch plate *h* (Fig. 139), arranged so as to engage with the corresponding steel plate *j* carried by the catch *f*. It will be readily understood how by this arrangement the oscillation of the lever *d* in one direction gives an opening movement to the valves, while the closure of the latter under the pull of the spring connected to the arm *g* will evidently take place whenever the steel plates *j* and *h* are disengaged from each other.

"The disengagement of the catches *h j* is effected, under the control of the governor, by an ingenious arrangement, which we shall now describe, and which permits of the cut-off being varied from zero to 80 per cent. of the stroke. In the ordinary Corliss gear it will be remembered that the detachment of the valve must take place while the latter is opening, and thus, if detachment has not taken place before the valve is fully open, the admission goes on to the full extent permitted by the undetached valve. In the Farcot gear, on the other hand, the detachment may take place on either the opening or closing strokes of the valve, the means by which it is effected being as follows:—On the boss through which each admission valve spindle passes, are mounted two cams *k k'*, as shown by Figs. 138, 140, and 141; these cams being coupled by the links *l l'* to one arm of a bell crank (see Figs. 137 and 138), the other arm of which is connected to the governor. The projections on these cams act upon the detent *f* as follows:—The projection of the cam *k* acts directly on the finger *m* (Fig. 141) and serves to lift the detent *f* and release the valve during the opening stroke of the latter, thus cutting off the steam at any point from zero up to about 35 per cent. of the stroke; the cam *k'*, on the other hand, acts upon the movable finger *n*, and serves to release the valve during its closing stroke, thus cutting off the steam at from about 35 to 80 per cent. of the stroke.

"Referring to Fig. 141, it will be seen that the finger *n* slides within *m*, and is pressed out by a spiral spring. During the opening stroke of the valve, *n* is pressed within *m* by its end coming into contact with an inclined surface on the cam *k'* giving the longer admissions. In this way the cam *k'* is prevented from interfering with the action of the cam *k* when the engine is working with short steam admissions. On the other hand, when the opening movement of the valve has taken place sufficiently far, the projection on *k'* completely passes the finger *n*, and the latter is then forced out by its spring ready to engage with the projection of the cam *k'* during the return stroke of the valve.

"The wearing parts of the gear we have been describing are of simple form, and are readily renewable, while, being made of hardened steel, the wear on them is exceedingly small. As compared with the Farcot gear exhibited in 1878, that now described has the advantage that the arrangement for giving late admissions is not in continual use. When working with the short admissions usual with

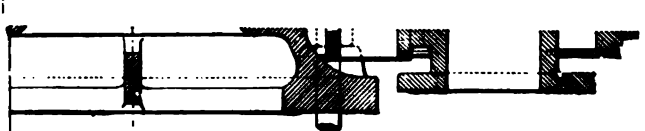

ng the Features of the Cylinder.

this class of engine, the finger *n* remains projecting freely from *m*, and it is only thrust back within the latter when longer admissions are required. The slopes of the cams *k* and *k'* also being very gentle, exceedingly little work is thrown upon the governor.

"A special arrangement of one of the cams also prevents the engine from running away in the event of the governor breaking down, this cam shutting off the steam completely in the event of the governor stopping and the balls closing. It will be noticed on reference to our detail views that the valve spindles are without stuffing boxes, they simply working in well-fitting gun-metal bushes fitted to the bosses through which they pass."

Features of Cylinder.—A section of the cylinder is shown by Fig. 142. The endeavour to reduce clearance by placing the valves in the covers will be noticed and appreciated. The steam-jacketing is a special feature of this engine; and an inspection of the figure will show that the covers are also constructed to give ample space for boiler steam.

A point to which exception may be taken is the double reversal of stress on both steam and exhaust rods and wrist-plate pins, due to the particular location of the latter; but this point has evidently been subordinated to that of keeping the dwelling angles as small as possible. That there is a double reversal of stress on these parts is apparent from the general view of the engine.

Wheelock Gear.—As another example of a single eccentric gear giving a wide range of trip, the Wheelock gear may be cited. The rods which actuate the trip levers receive their motion from the eccentric in a similar manner to the Frikart gear. The governor determines the position of the motion of the tripping piece, but not the amount, that being constant at all times. Strictly speaking, the valves are not of the Corliss type, but consist of multiple-ported grid valves working on a flat face. This face is formed on a conical plug of special hard metal forced into suitable taper holes in the cylinder. The connection of the spindles with the valves is through the medium of a toggle joint, situated inside the valve chamber, a device which has the advantage of giving a rapid opening motion; a good feature usually purchased at the expense of a wrist plate. Messrs. Daniel Adamson & Co., Dukinfield, are manufacturers of the Wheelock gear.

Size of Tripping Catches.—The following table gives the width of tripping edges of nibs or catches compiled from actual practice, and will perhaps prove useful in the design of new gear. As might be expected, the dimensions are somewhat erratic. The average pressure per square inch of catch surface, due to the pull of the dashpot spring at the moment of engagement, runs out to something like 340 lbs. as an average, which may be taken as a rough guide for speeds up to 85 per minute. The depth of catches varies from $\frac{1}{8}$ to $\frac{3}{8}$ inch. In some cases the nibs are undercut to the extent of $\frac{1}{64}$ per inch of depth, to ensure them gripping without slip, but most firms consider this to be unnecessary. It is here mentioned because it may be a remedy for existing gears subject to this

trouble. Slipping generally arises from the bouncing of the catches, and is usually met with when the piece carrying the dropping catch is heavy and does not fall on leather pads:—

Revolutions Per Minute.	Size of Cylinder.	Steam Chest Pressure.	Width of Catches.	Depth.	Pull of Dashpot Spring when Valve is Closed. In Lbs.
100	15 × 30	100	$1\frac{1}{2}$	$\frac{1}{8}$	120
90	18 × 36	120	2	$\frac{3}{16}$	128
80	20 × 42	95	$2\frac{1}{4}$	$\frac{3}{16}$	160
75	24 × 42	100	$2\frac{1}{3}$	$\frac{1}{4}$	170
60	30 × 48	40	$3\frac{1}{2}$	$\frac{1}{4}$	190
60	32 × 54	160	4	$\frac{3}{16}$	296
60	48 × 60	68	$4\frac{1}{4}$	$\frac{1}{4}$	220
50	57 × 84	33	$4\frac{1}{2}$	$\frac{3}{8}$	293
55	60 × 72	30	5	$\frac{5}{16}$	320

The examples above given refer to engines without wrist-plates. With a well-designed wriste-plate gear a higher speed may be attained with the same size of catches, because of the reduced velocity of nibs at the instant of engagement.

General Remarks.—In designing Corliss gear the following conditions should be fulfilled as far as possible:—The overhang of all pins and levers should be as small as possible, and wherever possible levers should work on the bridles rather than on the valve spindles. Gravity should assist the catches to engage, and the governor trip-rods should not be in continual oscillation. To obtain good results with speeds of 120 revolutions and over wrist-plates should be employed, the catch pieces and the parts which fly with the dashpot piston should be as light as considerations of strength will allow, the keyways in the valve spindles should be large, and twisting stresses should be avoided as much as possible by employing jawed rod ends embracing the valve levers, instead of having overhung pins.

CHAPTER IX.

DROP VALVES AND GEARS.

CONTENTS.—Cornish Valves—Valve Motion for Cornish Valves—Form of Cams—Cornish Valves with Trip Motion—Robey's Valve Gear—Marshall's Valve Gear—Sulzer Valve Gear—Borsig Valve Gear—Tosi Valve Gear—Kerchove Valve—Dashpot Springs.

The Cornish or Double-Beat Valve has not been extensively adopted in this country, except by makers of large winding and pumping engines; but in a modified form it has for years been largely employed by Continental builders, by whom it has been brought to such perfection that it already compares favourably with the Corliss valve gear. The future practice in steam engines promises to utilise the double-beat valve very largely; for with the revival of superheating arises the want of a valve that has no rubbing action on its seat. A similar change took place in the design of gas engine valves some years ago. In the old engines the cycle of operations was controlled by slides, whereas modern engines have mushroom valves.

Dealing first with the valve proper, the object of the designer should be to produce a valve that is as short and light as possible, and one that has the least possible lift. The common form of Cornish valve is shown by Fig. 143. The narrower the faces or beats the easier is the valve kept tight, but if too narrow they soon become worn and require renewal. The lift necessary to give the full area of the lower seat is (neglecting the wings of the valve)—

$$\frac{1}{4}\left(\frac{D^2}{D + d}\right),$$

where D and d are the diameters of the lower and upper seats respectively. The wings or ribs which are necessary to prevent distortion of the valve under the steam pressure diminish the area, consequently a little more lift is required than is given above, but at the same time the area through the lower seat is considerably diminished by the ribs and the central boss, this should be taken into account from the first, and allowance made, otherwise it may be that the design may be far advanced before the insufficiency of the area is first discovered.

A = width of bar for lower seat.
B = 2 lift + A.
The area of the annulus C = half the area of lower seat.

Unless the distance between the two faces be made as short as

possible, the valve may be leaky, owing to the difference between the expansion of the valve and the seat. The upper seating plate should be well ribbed, or the steam pressure will deflect it, and leakage will ensue; and the valve and seat should be cast of metals having equal coefficients of expansion. With respect to the valve faces the following widths have been found to give satisfaction :—

Valve	6	inches diameter	inside largest seat,		$\frac{1}{8}$	inch width of seat.	
,,	8	,,	,,	,,	$\frac{5}{32}$	,,	,,
,,	10	,,	,,	,,	$\frac{3}{16}$	,,	,,
,,	12	,,	,,	,,	$\frac{7}{32}$	,,	,,
,,	14	,,	,,	,,	$\frac{11}{32}$	,,	,,

The angle of the faces in each case was 45°, and the width given is measured horizontally, hence the actual width of the seat is $\sqrt{2\,W^2}$. It will be seen on inspecting the figure that the width

Fig. 148.

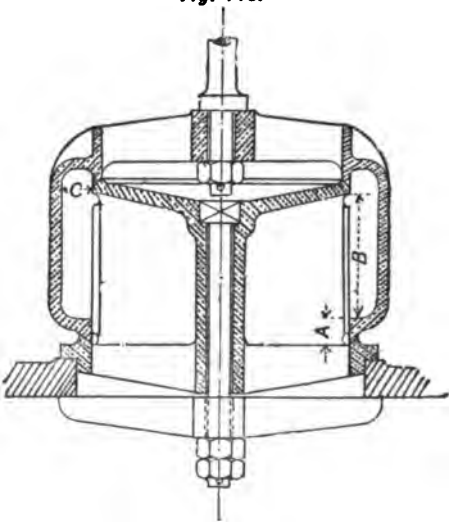

of the faces controls the difference in the diameters of the upper and lower seats, and consequently the power required to lift the valve off the seat. Were the two diameters equal, the valve would be in equilibrium except for its own weight, and the unbalanced area of the spindle, which might counterbalance each other; but unless the valve were under the control of a spring it would be leaky, and the presence of any grit on the faces would seriously impair its working. When the difference between the diameters of the two faces is, however, sufficient to give the widths above mentioned, sufficient unbalanced pressure is brought on the valve to keep it tight, and hammer away the small amount of foreign

matter that might, under the ordinary conditions of working, be deposited on the valve faces.

In the next figure a more modern form of double-beat valve is illustrated. This is an improvement on the previous design, because for a given area the valve is lighter, and as an exhaust valve it offers less condensing surface to the steam in the cylinder. In all valves of this type it is important that both valve and seat should be of the same metal, so as to avoid difference between the expansion of the two parts, otherwise there will be a continual leakage of steam. Close-grained cast iron of special toughness is the most suitable material for the valves and seats. For many years gun-metal was used; but with high pressure or superheated steam it is not satisfactory, because of its unequal expansion with the metal of the cylinder.

Fig. 144.

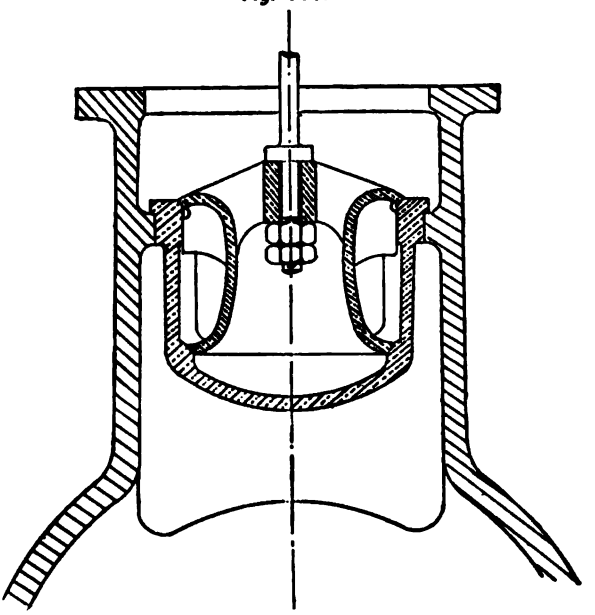

By combining two double-beat valves an extremely small lift for a given area is obtained, a point of some importance in large engines where trip gear is used. Such a valve is shown in the annexed figure. With this type the necessity of attention to equal expansion is emphasised, there being four faces liable to leakage; and first-class workmanship is indispensable to satisfactory working.

A common arrangement of Cornish valve motion is shown in outline in Fig. 146. The position of the cams depends upon the desired point of cut-off. The valves, of course, can have no lap, but by placing the steam cams so that they do not lift the valve

until the valve-rod is past its central position the same effect is produced as by a lap on a slide valve. If the levers and cams were set so that when the valve-rod was in the centre of its travel all the valves were just on the point of being lifted or released, the resulting distribution would be similar to that given by a slide valve having neither steam nor exhaust lap.

In designing the cams it is important to see that the first point of contact is near the fulcrum of the cam. The advantage of this

Fig. 145.

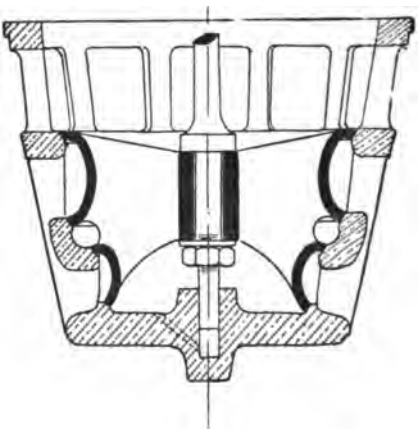

is twofold. It throws less stress on the valve gear, because at the instant of contact the valve is not in equilibrium. In the second place the speed of the striking part of the cam is slow, and the action, therefore, quiet. When the valve has been lifted it is in equilibrium, and as the point of contact is continually receding from the fulcrum of the cam, the opening is rapid; also, on closing,

Fig. 146.

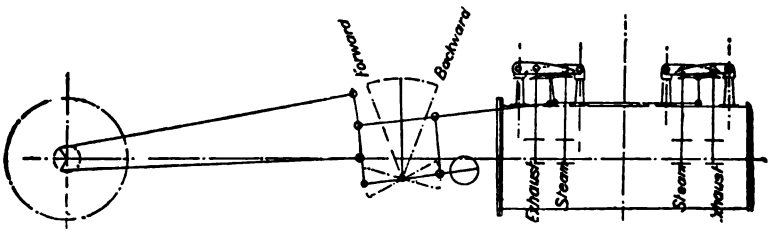

the valve is let down to its seat without a jar. This action will be better understood from Fig. 147, where the cam and lifting

lever are shown in two positions, the first in which the valve is on the point of being lifted from its seat, the second in which the valve has attained its extreme lift.

The Cornish valve, when adapted to a tripping arrangement, forms a useful gear for large winding engines. The essential feature of this class of engine is that it must start rapidly and maintain its speed to the latest possible point in the wind. The gear about to be described accomplishes the desired action in a very effective manner. It was designed by the author in 1898 for a large winding engine in the Lancashire coalfield. In Fig. 148 the valve-rod A and the rocking-rod B receive motion from the eccentrics through the medium of a reversing motion of the straight link type. Until the maximum speed is attained the steam is carried on for nearly the whole length of the stroke, but when the maximum is reached the governor moves the small cams C into a position that brings

Fig. 147.

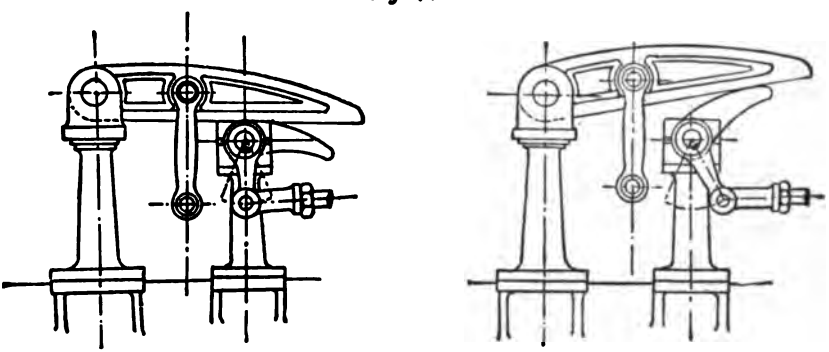

them in contact with the rising trip hook. The valve, spindle, stirrup, and hook are then left to fall to the closed position by reason of their weight, and the air cushion, which can be regulated by a small thumb screw, prevents the valve falling violently on its face. In cases where the valve is light and the pressure high, a spring would be necessary to close it promptly, because of the unbalanced area of the valve spindle and the friction of the stuffing box. The maximum speed being once attained, a very small amount of steam is sufficient to maintain it, because the load becomes lighter every instant, owing to the diminishing weight of rope on the ascending cage and the increasing weight on the descending rope. Tripping, of course, must take place before the trip hook begins to descend—that is, somewhat before half-stroke —as in the single eccentric Corliss gear. The indicator diagram from a complete wind will illustrate the action clearly.

From the figure it appears that after about five revolutions the

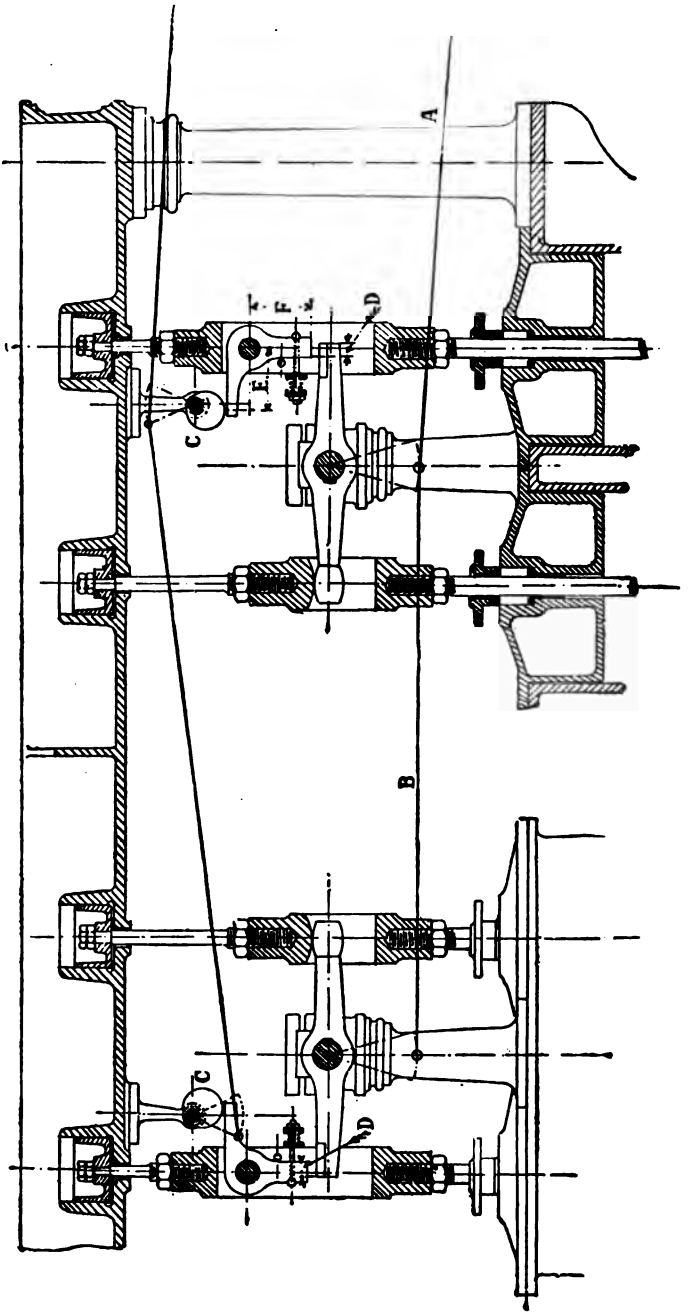

Fig. 148.

speed at which tripping occurs is obtained. For several strokes the speed increases, as shown by the early tripping, until, towards the end of the wind, a mere breath is admitted. The stop valve is then closed, the brakes applied, and the engine rapidly brought to rest.

Fig. 149.

Fig. 150.

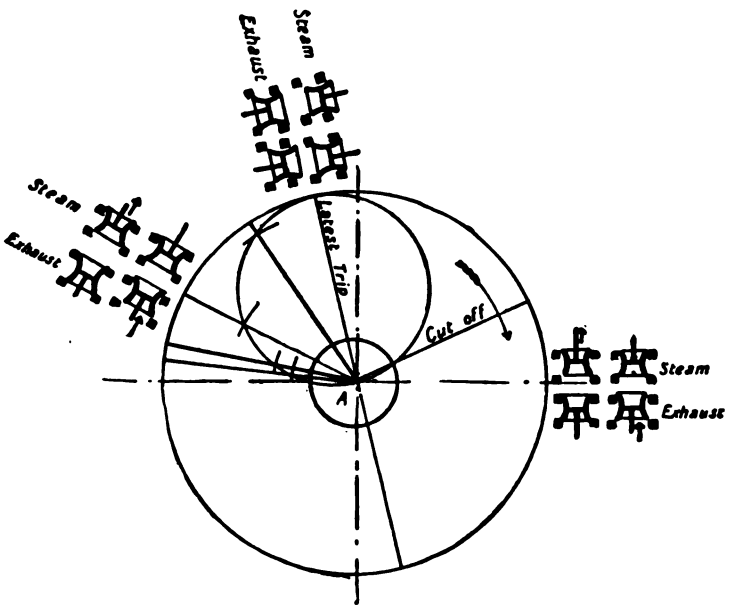

Valve Action shown for Latest Cut-off.

The action of the trip may be clearly shown by means of a Zeuner diagram. In the figure the clearance between the lifting lever and the trip hook is drawn as a lap circle, and the lead being

fixed upon the angle of the eccentric is known. Draw the valve circle, and from the centre A, with a radius equal to the distance between the pallett of the catch and the cam, + clearance between lifting lever and trip hook, + overlap of tripping edges (D in Fig. 148), describe an arc intersecting the valve circle.* A line drawn from A through the point of intersection will show the crank position when disengagement takes place. Should the arc fall without the valve circle no disengagement will take place, and

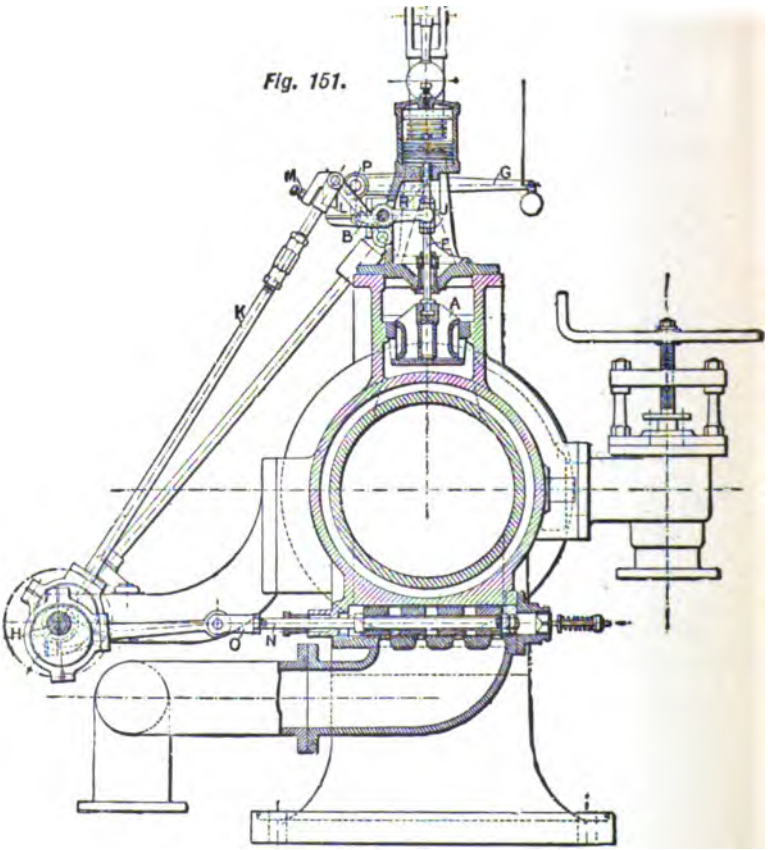

Fig. 151.

* This construction applies where the distance from the fulcrum of the catch to the point at which the cam strikes is equal to the distance from the fulcrum to the working edge of the catch. Should these be unequal the radius of the arc will be increased or diminished proportionally. In Fig. 148, should the distance E exceed the distance F, the radius of the arc will be greater by the difference of these distances referred to the distance D.

steam will be carried on until cut-off occurs by virtue of the clearance of the catches.

In non-reversing engines the gear for a double-beat valve motion is more conveniently arranged. A horizontal shaft driven by bevel or skew gear is carried parallel to the centre line of the engine. On this shaft the eccentrics are placed at convenient positions. The best known English example of this type of gear is that made by Messrs. Robey & Co., Lincoln. The arrangement will be

Fig. 152.

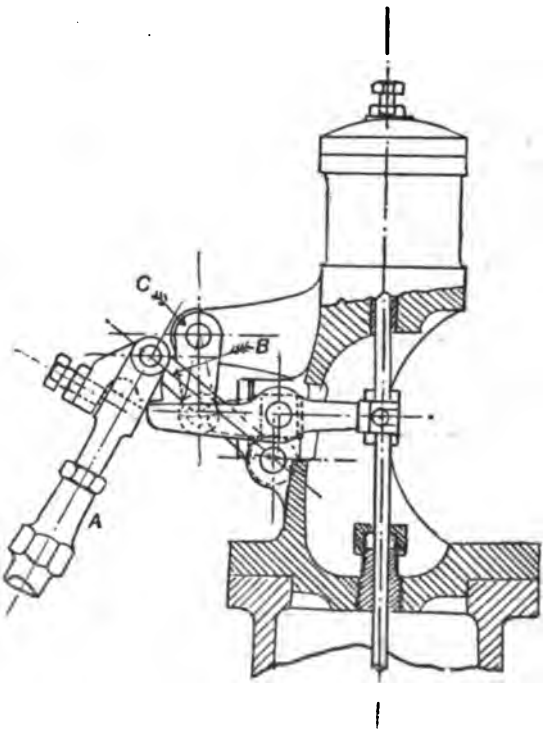

followed from the accompanying figures. The method of governing and tripping is similar to that of an ordinary Corliss gear, and the range of tripping depends upon the clearance of the catches and their lap, just as in the Corliss gear the range depends on the ratio of the lap of the valve to its travel. The steam eccentrics are placed at an angle of 180° to each other—that is, opposite. The exhaust valves, it will be noticed, consist of gridiron slides at the bottom of the cylinder. The advantages of this arrangement are

the excellent natural drainage of the cylinder and the short travel of the slides. As in the case of the steam valves, the exhaust eccentrics are set opposite to each other. Returning to the detail of the trip motion (Fig. 152) the end of the eccentric-rod A is

Fig. 153.

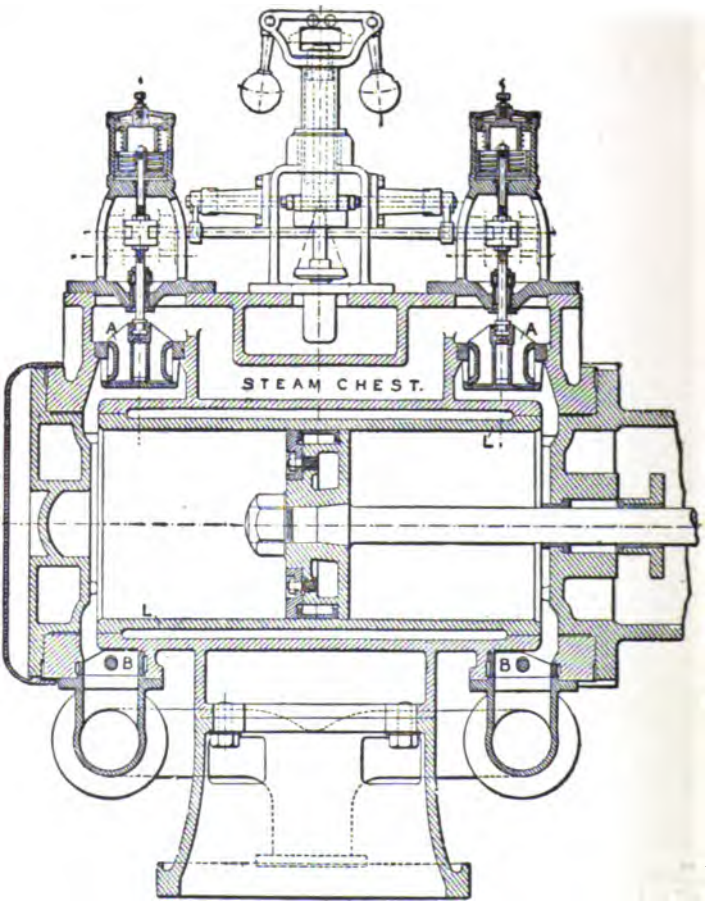

carried by the anchor levers B, the fulcra of which are carried by the valve bonnet. As previously stated, the point at which tripping takes place depends on the depth of the engagement of the catches, which depth can be adjusted in two ways—per-

manently by altering the set screw on the catch lever, and temporarily by the action of the governor on the lever P, thus altering the position of the lifting lever. The set screw adjustment is resorted to when any permanent change in the load is made, or when a permanent increase or decrease of speed is desired; whilst the governor adjusts the cut-off so that the desired speed is uniform.

On setting out the movements of this gear it will be found that a very small movement of the lifting lever will produce a wide variation in the point of cut-off. This means that the mechanical purchase between the balls of the governor and the lever C (Fig. 152) is considerable, consequently the plucking action on the governor is very slight. The lifting lever is forked where it engages with the valve spindle, and the movable fulcrum is carried in hardened slides, thus permitting the necessary horizontal movement.

As arranged on the old winding engines, the Cornish valve gave exceptionally large clearances, and carried with it other features antagonistic to economical working. The usual arrangement of the valves with respect to the cylinder was a valve at each corner of the cylinder, the two steam valves being on one side and the two exhaust valves on the other; or alternatively all the valves were placed on one side, a single port into the cylinder at each end serving for both steam and exhaust. With either arrangement the clearance is necessarily large. In the first arrangement there are two ports plus the space round each valve forming clearance; whilst in the second design, although there is only one port, there is a large space between the two valves, making the total clearance as great as in the first case. A further inherent defect of the older form of valve is that there is a considerable condensing surface offered by the exhaust valves. In non-compound engines one side of each exhaust valve is exposed to the atmosphere; and as the valves were usually made of gun-metal as thin as circumstances would allow, it will be seen that the exhaust valves must have had a considerable condensing effect during the admission and expansion periods. The final objection to the arrangement is that it does not provide a natural drainage to the cylinder, but leaves pockets in various places where water can accumulate. It was a great improvement when the valves were placed at the top and bottom of the cylinders; for in this case the clearance is reduced, and an excellent cylinder drainage is obtained without pockets either in the cylinder or valve boxes.

Marshall's Valve Gear.—The gear made by Messrs. Marshall, Sons & Co., Ltd., Gainsborough, is shown by Fig. 154. It consists of two equilibrium admission valves A which are alternately lifted by the trip levers B. The outer ends of these valves are depressed by means of the catch levers C which are carried by the links D. These links are worked by eccentrics E placed diametrically opposite to each other on the valve shaft. The ends F of the

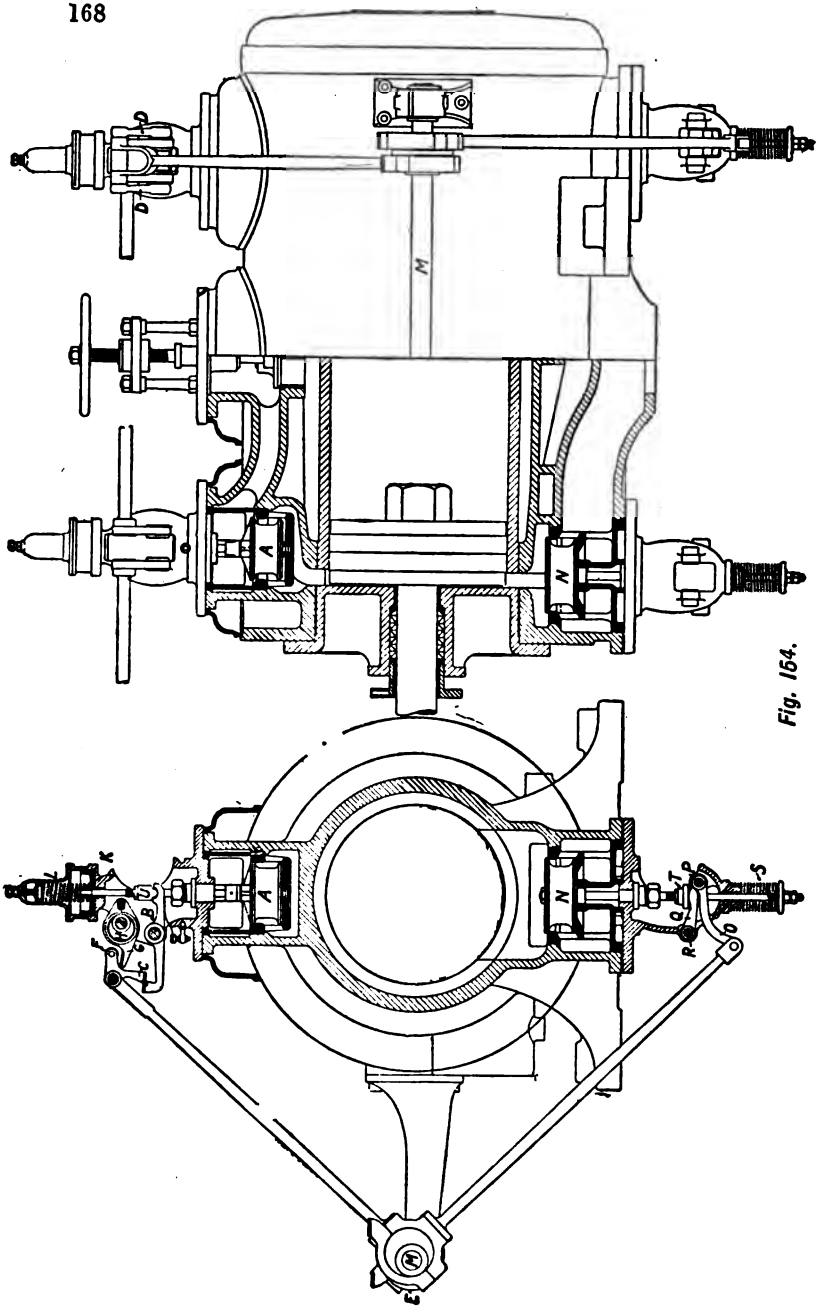

Fig. 164.

levers C are thus brought into contact each revolution of the engine with trip pads G. These pads are under the control of the governor, and their position determines the period of release. L is the closing spring, and the seating of the valves is regulated by the buffer K.

The method of carrying the trip pads G is worth close attention. These are not simple levers having the shaft J as a fulcrum, but they are supported at the end by a swivelling stud fixed in the steam-valve hood. The object of this arrangement is to avoid disturbance of the governor when tripping takes place, for the reaction of F on G is for the most part sustained by the stud at the end of G, only a very small portion of the force being transmitted to the governor.

The exhaust gear is clearly shown by the illustration, and it will be observed that variable leverage is obtained by means of curved levers O and Q, and closing of the valves is effected by springs S.

A feature common to all types of drop valve gears is that the valves are not in positive connection with the eccentric or cam that drives them, but are closed by the force of a spring or gravity. This is essential to the proper seating of the valves, and to avoid the possibility of the gear jamming, for since the position at which the valve is seated is one of mathematical exactitude, the slightest error due to expansion, stretch of the levers, or incorrect adjustment would seriously affect the working of the valves.

The well-known **Sulzer gear** is one of the most interesting examples of drop valve gear, the latest type having several features of great interest. The folding plate illustrates the valve gear on the high-pressure cylinder of the engine exhibited at Paris in 1901. At first sight the gear appears to be unreasonably complicated, but a careful inspection of the figure will show that every part contributes to the efficiency of the gear, and nothing that is wanted in a high-class gear has been forgotten. A general idea of the action will be formed from the plate, but a thorough knowledge of the various movements can only be obtained by drawing down the centre lines and tracing their movements through a complete revolution. Commencing at the lay shaft A, the eccentric-rod B imparts motion to the bell-crank lever C, one of whose arms actuates the exhaust gear, whilst the vertical arm controls the opening of the steam valve. The connection between this arm and the valve-rod D is not of a positive character, however, but arises through the medium of catches E. The fulcrum of the curved lever F G is at P, and as long as the catches are in gear the revolution of the valve shaft in the direction of the arrow will, until the eccentric-rod begins to return, drag down the valve-rod D and lift the steam valve. The fulcrum P also serves as an anchor for the catch lever. This lever likewise receives its motion from the eccentric, and the rod Q connected thereto receives a positive and

constant amount, but the position of the motion is altered by the governor operating upon the horizontal shaft H. This portion of the gear resembles the Frikart gear in its action. In the drawing the normal position of the governor lever is shown. As the lever J moves nearer the vertical centre line the release of the catches will be delayed. On the other hand, movement in the opposite direction will accelerate release.

The chief point of interest in this gear, however, lies in the rolling valve levers and adjustable palletts. Referring to the steam rolling lever K, and assuming it to be in its highest position, the first point of contact is close to the end of the lever, which means that the gear has a great leverage over the valves just at the moment the stress comes upon the motion. As soon as the valve is off its seat it is practically in equilibrium, and the rolling lever is then continually decreasing its purchase, thus imparting rapid opening to the valve at the time the piston is travelling at high speed. As to the pallett, it is centred on the pin M, and is adjustable by means of nuts on a thread. The action of the main dashpot will be readily followed, but the supplementary cushion spring is a refinement which Messrs. Sulzer find necessary to give a proper closure to the valve, and its action is peculiar. In the drawing the steam valve is shown full open, but it will be understood that this is not its correct position in relation to the position of the rest of the gear, but it is so drawn in order to show the extremely short lift of valve. The break in the valve stem indicates that the valve and gear are not drawn in their true positions relative to one another. Returning to the cushion dashpot, it will be observed that when the catches are released the main spring descends with the valve, at the same time lifting the valve rod D, the curved lever, and the cushion dashpot piston. There is no cushioning action on the main spring, but as the cushion piston approaches the end of the cylinder a break is brought upon the main spring, and as this acts at a purchase it is possible to obtain an exceedingly delicate adjustment. Had only the main spring been cushioned some means would have had to be provided for limiting the motion of the rolling lever and the rods in connection with it, otherwise the descent of the main spring would jerk them badly, hence the break cylinders become vital parts of the gear. It is, of course, highly important that the regulation of the closure of the valves should be entirely under control; any hammer on the faces would soon destroy them.

In the exhaust gear the rolling lever and pallett are employed, and the valve is opened against the resistance of a spring, but there is no release gear or cushioning. The valve is shown full open, but that is not its correct position with reference to the rest of the gear.

The plate is well worth close inspection. The very complete arrangements for lubrication are specially interesting, as well as

the precautions against waste oil running upon the foundations. The lagging question has also been thoroughly thought out, and accounts in a large measure for the splendid appearance of the Sulzer engines. Another point which is worth notice is the absence of over-hung pins. All levers are jawed where they embrace the rod-ends, or else the rod-ends are jawed and embrace the levers. This renders the manufacture of the moving parts costly, but

Fig. 156

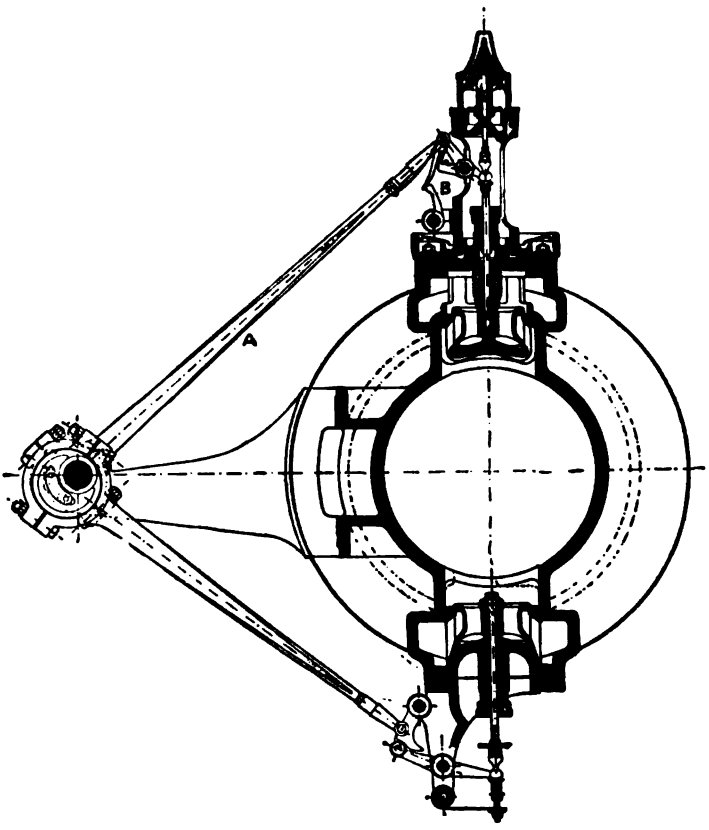

Messrs. Sulzer ignore expense where efficiency of the gear is concerned.

Borsig Gear.—Another example of Continental gears is represented by the Borsig gear shown in Fig. 156. It is made under Collmann's patent. The steam eccentric A lifts the valve spindle through the medium of a catch lever, the toe end of which comes in

contact with the governor trip finger B. As the end of this finger moves to the left cut-off becomes earlier. The catches engage when the eccentric-rod is near the beginning of its downward movement, and the striking velocity is therefore low. The valves are of the usual double-beat type, the steam being fitted with neutralising springs and oil cushion dashpots.

The exhaust gear consists of an intermediate lever carrying a roller which runs upon the inclined and curved face of the valve lifting lever.

The Tosi Trip Gear.—The trip gear made by Messrs. Tosi, Legnano, Italy, is well designed and possesses some interesting features. Referring to the accompanying figure (157), the sector A swings between the jaws of the eccentric-rod, on the pin B, and moves bodily by reason of its connection to the eccentric. Assuming the eccentric-rod to be in the top position its descent will bring the sector in contact with the valve lever D, which lifts the valve; but whilst this action is taking place the sector will turn on the pin B, because the point E is held by the trip-rod F. At a certain point of the sector's descent it will slip off the steel pad on the lever D. When released the valve lever flies to its closed position, and the sector continues its descent, and on the return upward movement the point of the sector describes a peculiar path, due to the influence of the exhaust valve cam, which path is indicated in the drawing. When in its lowest position the sector retraces a portion of its downward path, because the roller G is for a short time rolling on the inactive part of the cam, but after the sector has risen a small fraction of its movement the point makes a diagonal movement to the left, due to the influence of the raised part of the exhaust cam, and then traces a path approximately parallel to its downward course. As its top position is approached a deflection to the right is made by reason of the slope from the raised to the dead portion of the exhaust cam. This deflection allows the sector to get around and above the valve lever ready for another engagement. The governor acts on the sector by varying the position of the floating fulcrum H, to which the trip-rod F is connected. The drawing shows adjustment for latest trip which occurs at about 70 per cent. of the stroke. As the governor rises from this position the lap of the sector on the pad at the moment of engagement is diminished, and tripping is earlier. The function of the spring K and the roller J is to prevent jerking of the lever D as the valve closes, and to keep this lever at all times pressed against the valve spindle sleeve, the necessary clearance between the eccentric and the valve being provided at the point of the sector. L is the dashpot piston which is pressed down by a spiral spring (not shown), and cushioning is effected by a small valve at the bottom of the dashpot chamber.

The exhaust gear is very simple. The spring box M keeps the roller against the cam at all times, a small clearance being given

between the exhaust valve lever and the lifting piece on the valve spindle with which it engages. The exhaust valve is closed by a

Fig. 157.

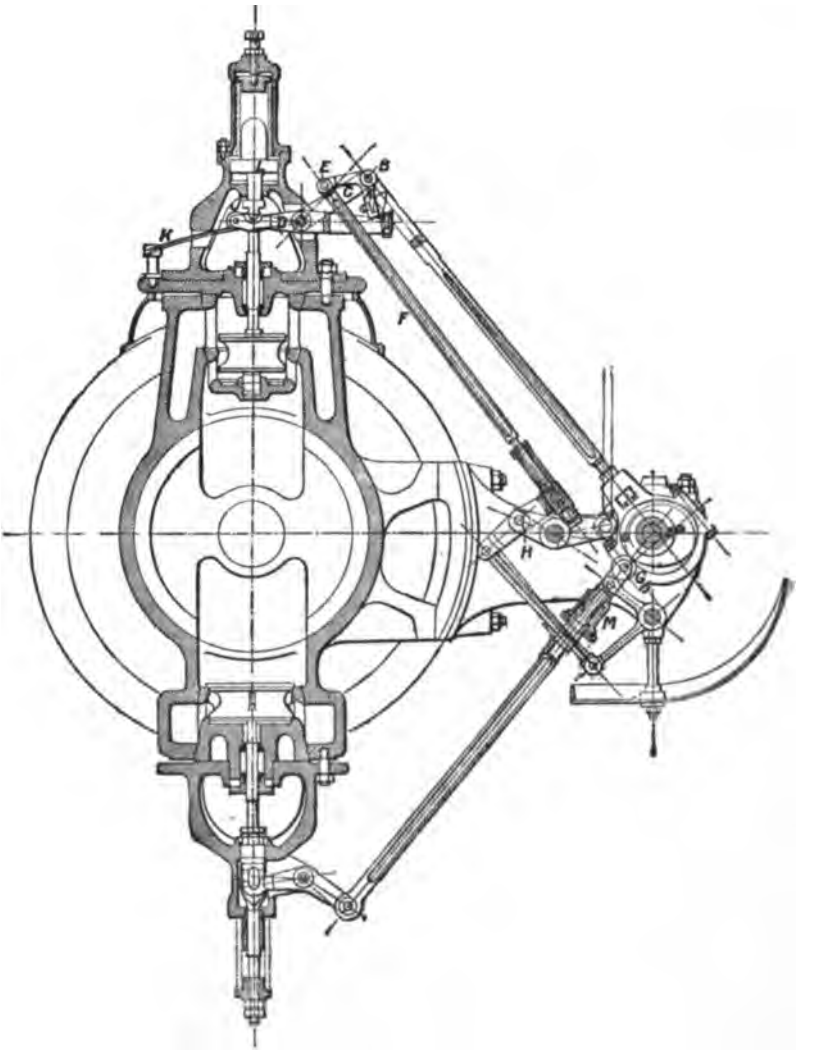

spring, but there is no cushioning action, the easy curves of the exhaust cam rendering this unnecessary.

Kerchove Valve Gear.—The drop valves shown in Fig. 158 are of the piston type, and are illustrated in position relative to the cylinder of a Kerchove engine. It will be noted that they are of the piston type, and are placed in the covers, thereby rendering the clearance very small. This type of valve is in perfect equilibrium save for its own weight and the unbalanced area of the spindle; and as it does not fall upon its seat, but has a sliding action in closing, the dashpot forms the limit for its fall, and the regulation of the buffer is, therefore, not of such supreme importance as in the case of a drop valve of the double-beat type. The drainage of the cylinder is seen to be effective; but the positions of the valves render the inspection of the cylinder or piston

Fig. 158.

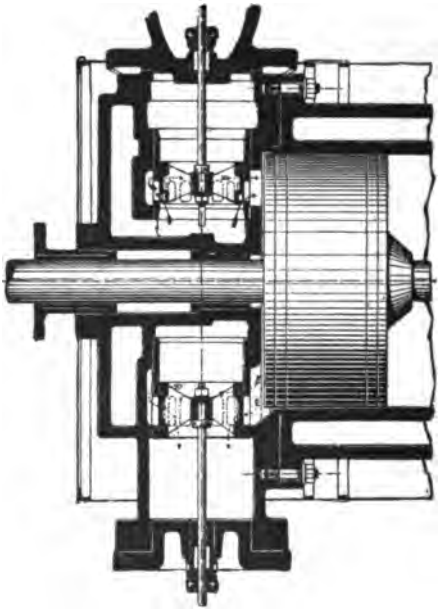

a tedious matter, since the gear must be dismantled before the covers are removed. As to the valve gear proper, it may be of any of the types of trip gear herein illustrated in connection with drop valves, so far as the steam admission and release are concerned. The exhaust gear, however, may be positively connected to the exhaust valves, and springs are, therefore, unnecessary; the valves having a dwelling or idle motion similar to the exhaust valves of a Corliss engine.

Dashpot Springs.—Examples of dashpots will be found by referring to several of the figures in this chapter. The springs are mostly made of round steel. They should be of good length,

with a short pitch of coil. Many English designs are faulty in this respect, and compare unfavourably with the long springs provided by the best Continental makers. In addition to the durability of a long spring, there is a more uniform closing pressure obtained, and the governor effort to disengage the catches is practically constant throughout the stroke. In some engines there is a liability to pluck the governor at heavy loads, because of the short dashpot springs giving excessive pressure on the catches as the valve rises to its top position.

The length should not be less than eight times the full lift of the valve, and is better if made 50 per cent. longer, the length being taken when the spring is in position in the buffer cylinder and the valve closed. With regard to strength, it is not surprising to find that modern practice shows little uniformity; for, after all, the question of strength is largely a matter of opinion. If the valves could be regarded simply as weights falling freely on their face, it would be possible to calculate the time occupied in falling from their highest position under the influence of a spring of given strength. The problem, however, is hopelessly complicated by the retarding effect of the cushion, the friction of the stuffing box and dashpot piston, and the steam current sweeping past the valve. Fortunately, however, the effect of these incalculable factors can be met by a simple adjusting screw on the spring, and a variable throttle on the dashpot. An examination of some of the engines of British makers shows that an average pressure given by the spring when the valve is down is 6 lbs. per inch of the diameter of the valve measured on the outside of the largest seat, plus the amount of opening force (which is measured by the area of the valve stem and the steam pressure) minus the falling weight of valve, spindle, and dashpot. An adjustment giving 20 per cent. variation on either side of this strength can easily be provided by an adjusting screw on the spring, whilst the throttle can be arranged to prevent the valves falling on their seats or allowing them to fall practically free. In the steam valves the current assists the valve to seat; but, on the other hand, the spindle gives an unbalanced upward pressure against the spring pressure. In the exhaust valves the spindle area assists the closing of the valves in high-pressure cylinders, and is against closing in condensing cylinders.*

* See the author's article in *The Engineer*, May 26, 1905.

CHAPTER X.

MISCELLANEOUS GEARS.

CONTENTS.—Beadle's Rotary Valve Gear—Duplex Pump Valve Gear—Blake Valve Gear—Steam Reverser Valve Gear.

Beadle's Rotary Valve Gear.—The requirements of an ideal valve gear are perfect equilibrium, unlimited speed, and small clearances. The rotary valve gear made by Mr. C. Hyde Beadle realises to a considerable extent these requirements, and is also very compact. It is most conveniently made with two cylinders, either compound or otherwise, with pistons half a stroke apart, or any other desired position. It will be convenient to illustrate and describe the "helicrank" engine, because it embodies some features which render it of particular value for marine purposes, the cylinders being in axial alignment with the tail shaft.

Referring to the accompanying figures, four views of the helicrank engine are shown—a vertical section through the valve box, a sectional plan through the plane of the piston-rods, and two end elevations of the engine with the valve-chest covers removed. The ends of the piston-rods A are provided with adjustable rollers B, which roll upon the helix C, thereby imparting a rotary motion to the main shaft, and also to the valve spindle D. The valves consist of two revolving discs with prolonged stems, and suitable slots and cavities to effect the proper distribution. The valves are mounted on the spindle by means of feather keys, whereby they always rotate with the spindle, but, at the same time, are free endways. The faces of the stems are accurately faced, and form the stop which prevents the valves from being forced against their faces. The force tending to press one valve to its face is exactly balanced by the force on the back of the other, and consequently the valves float, rather than rub, upon their face. The steam enters at F, from thence it circulates round the cylinders to the valve chests. The extremely short and direct ports on the cylinder will be noted, and also the absence of external pipes or passages. The exhaust passes round the prolonged stems of the valves, and escapes through G.

The reversal of the rotary valve engines is a very simple matter. One method is that shown in the figure. The valve spindle fits into the helix as shown, and is driven by the peg H. The reversing gear is shown in the mid position, and the action of the valves is such that no rotation would be given to the main shaft, but when the reversing handle is but moved into any other position the effect is to impart axial motion to the valves through the inclined slot in the helicrank. The effect of notching up is almost identical with that of notching up a link motion, only the action is more harmonic.

As showing the easy running of these valves, it may be mentioned that after running six months the valves of one of these engines still exhibited the minute original scratches made by the scraping tool. In ordinary crank engines the valve spindles are driven by

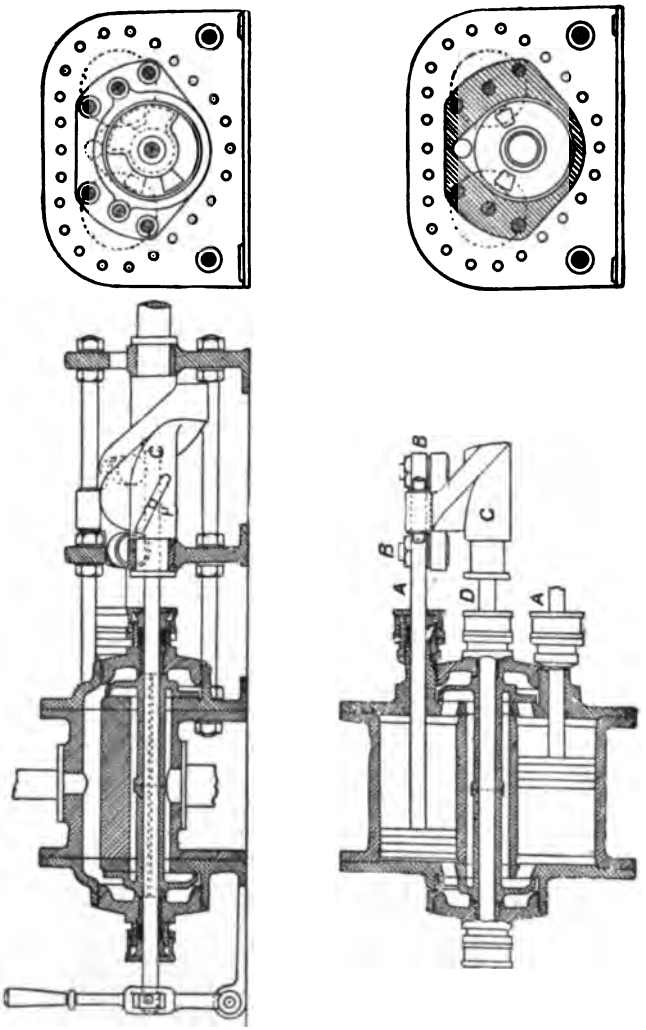

Fig. 159.

mitre or skew gear from the crank shaft in a similar manner to the shaft of a gas engine. Any desired sequence or angle of crank is accommodated by a suitable disposition of the ports leading to the cylinders and the design of the valves themselves.

With crank at right angles, or with a helicrank engine with one piston half a stroke in advance of the other, lines joining the centres of the cylinders form a right-angled triangle, and one slot in the valve thus distributes the steam to both cylinders, and one recess controls the exhaust.

Duplex Pump Valve Gear.—Fig. 161 shows a section through one of the steam cylinders of a duplex pump. The general arrangement of this type of pump is well known. There are two distinct and independent cylinders placed opposite and in axial alignment with two pumps, and the piston-rod of each cylinder is coupled directly to the pump-rod. The valve gear of one cylinder is operated from the crosshead of the other. There are two ports in each end of the cylinder, of which the outer ports B are provided for the entering steam, and the inner ports A for the exhaust. When in central position the valve exactly covers the two ports as shown in the illustration. The travel of the valve should not be less than twice the width of one port, and it is often convenient to make it greater. The peculiarity in the connection of the spindle to the valve will be noticed. The nuts are adjusted so that there is an amount of lost motion between the spindle and the valve, and in arranging the valve levers this must be taken into account. It is impossible, however, to predetermine the exact amount of this lost motion, hence it is the usual practice to provide for adjustment by an extension of the screwed part of the spindle. Usually the total amount of lost motion varies from $\frac{1}{8}$ inch for pumps with steam cylinders of 4 inches diameter to $\frac{1}{2}$ inch in cylinders 24 inches diameter and upwards. The effect of having too much lost motion is to give a long stroke to the piston, and since there is no mechanical limit to the stroke except that provided by the cylinder covers, the piston may strike. Too little lost motion gives short strokes, which diminishes the delivery of the plungers. As the piston approaches the end of the stroke the inner port is blocked up, and the steam remaining in the cylinder at the front of the advancing piston forms a cushion, which brings it gently to rest. Sometimes cushion valves E E are provided, by adjusting which the motion of the piston may be further controlled.

Fig. 160.

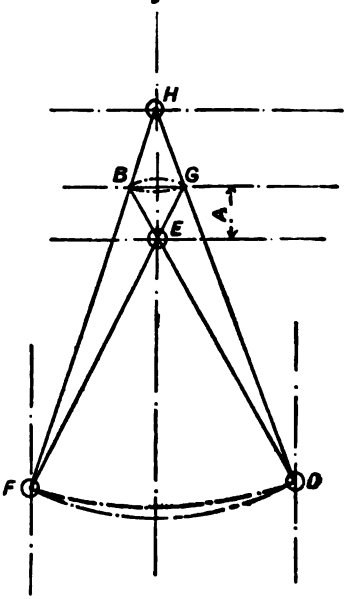

From the foregoing it will be understood that the arrangement of the cylinder end must differ from an ordinary cylinder. In the first place, the bell-mouth must not extend past the inner edge of the steam port, otherwise cushioning cannot be efficient, because there would be leakage through to the exhaust port. The ports should also be arranged as shown in the figure, and not recessed into the cover as is common practice in ordinary cylinders, otherwise it will be difficult to obtain proper cushioning, because the piston would strike the covers almost immediately after the inner port was blocked by the piston, and until the port has been covered cushioning cannot begin.

Fig. 161.

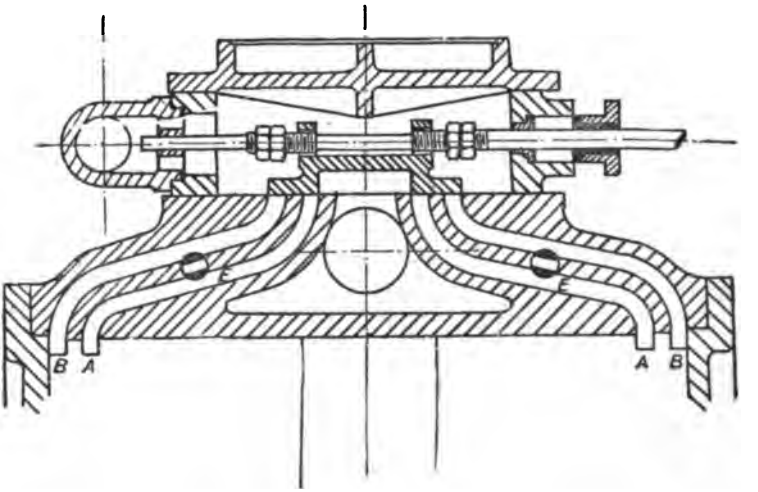

Passing on to the design of the valve levers, each valve has to effect the same travel. The cross-shafts are usually arranged above each other, and, therefore, the lengths of the short levers vary according to the lengths of the long levers, the movement of each extremity being equal to that of the other, and consequently the proportion or ratio between the valve lever and crosshead lever must be the same in each case. Another point to observe is that the length of the shortest valve lever is sufficient to allow of the connecting link to the valve spindle clearing the cross shaft. Referring to the diagram (Fig. 160), the stroke of the crosshead is from F to D, and is a known quantity. The travel of the valve spindle B G can also be ascertained. The minimum distance A is fixed by the detail of the connecting link and the size of the cross shaft. From B or G draw a line through E cutting the verticals indicating the length of the stroke. The point of intersection indicates the position on the crosshead where the con-

nection to the crosshead lever must be made, and also the length of the lever. Should the position be inconveniently high, a lower point may be selected and the distance A left to find itself. A higher point must not be chosen if A has already been made a minimum. Having determined the proportions of one crosshead

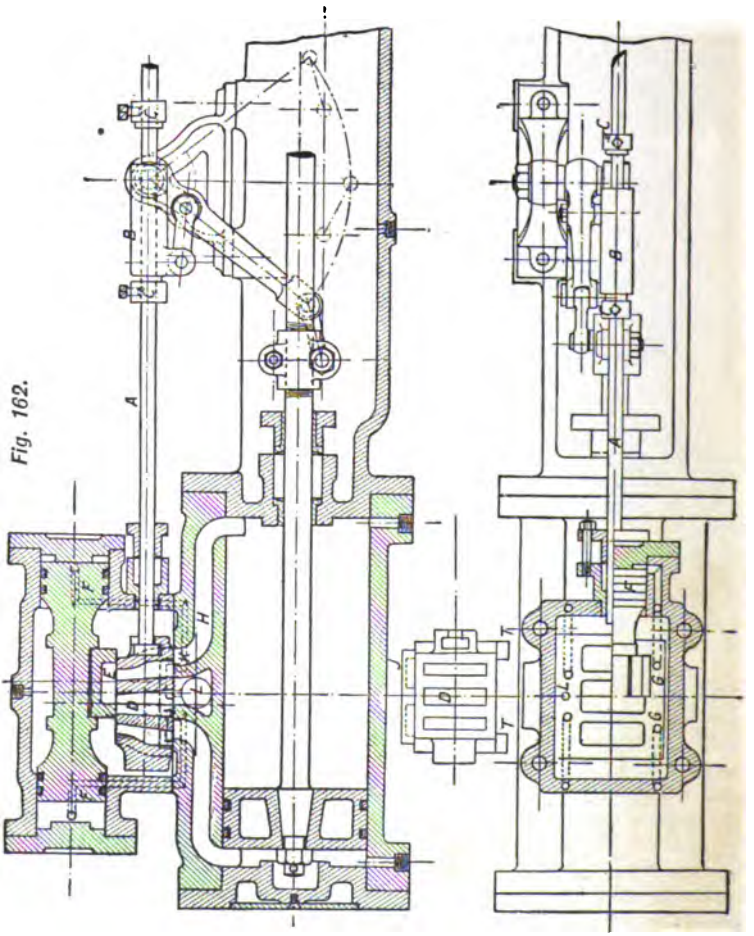

Fig. 162.

and valve lever, draw lines from F or D through B or G, and the point where they intersect the vertical line is the proper centre of the cross shaft. F H or D H is the length of the crosshead lever, and B H or G H the length of the valve lever, and the two valve travels are the same.

Sometimes the lost motion adjustment is outside the steam chest, especially in the case of large sizes. This enables the working of the pumps to be adjusted under steam.

Blake Valve Gear for Single-cylinder Direct-acting Pumps.—For a single-cylinder direct-acting pump a type of valve gear is required that receives a portion of its motion directly from the steam pressure; otherwise the pump would be liable to stick at the end of the stroke, since its inertia at low speeds would be insufficient to overcome the resistance towards the end of the stroke when it is necessary to alter the position of the valve to effect the return stroke. The Blake valve motion is a well-known example of this type of valve gear, and its action and details are illustrated in Fig. 162.

The valve spindle A is actuated by the tappet B striking the adjustable collars C. These collars are set so that contact is made towards the end of the piston stroke, and to give the valve D sufficient travel to place the steam ports alternately in communication with the exhaust port. The supplementary valve E is driven by the pistons F, and is thrown alternately to its extreme positions by the admission of live steam at the outer faces of the pistons; this action being regulated by the valve D in the following manner:—Referring to the plan view, it will be observed that the valve D has two projections T, which, when D is in its central position, cover the two small circular ports G. When D is moved to the right by the tappet it opens the right-hand port, thus throwing steam upon the back of the right-hand piston, whereby the supplementary valve E is moved to the left, thereby admitting steam to the port H. Whilst this action is taking place the exhaust projection J on the other side of the valve D has closed the exhaust port K to the exhaust passage L, and at the same time placed the steam at the back of the left-hand piston in communication with the passage L. It will thus be seen that a continuous action is obtained. At starting, should the valve E happen to be central on the valve D, it is only necessary to move the valve-rod a little in order to throw the valve on one side and uncover either of the steam ports in D. This is easily done with a small bar.

Steam Reverser Valve Gear.—The valve gear of steam reversing engines is usually of the hunting type shown by Fig. 163. This slide valve has very little lap, usually about $\frac{1}{32}$ inch. The lever A swings on a floating fulcrum B, the position of which is adjusted by the hand reversing lever C. The upper end of A is connected, on the one hand, with the valve of the steam cylinder, and, on the other hand, to a valve regulating the fluid passage from each end of the cataract cylinder. The lever D is keyed on the reversing shaft and is actuated by the piston-rod of the reversing engine. In order to trace the action of this gear, imagine the piston at one end of the stroke and the reversing handle also pushed over into extreme position. Now suppose the reversing

handle moved over into the opposite extreme position. This action will uncover the steam port and the piston will advance to the other end of the cylinder, but this action will move the valve back to its original position and at the same time close the communication between the ends of the cataract cylinder. When the reversing handle is moved into any intermediate position the same action occurs; the valve being opened by the hand lever but closed by the motion of the piston-rod. The reversing shaft is thus in sympathy with the hand lever, whilst the cataract cylinder holds the gear rigidly in the desired position. After each movement the valve returns to a central position on the steam port, and

Fig. 163.

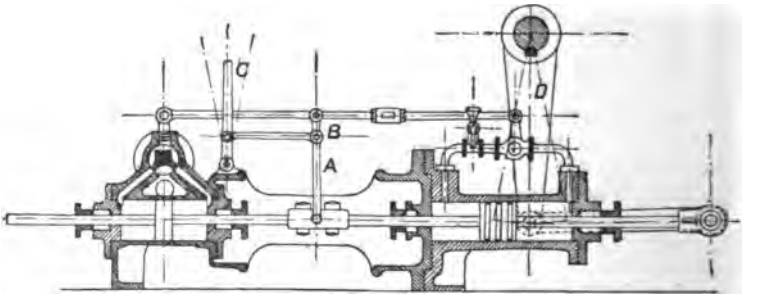

the cataract valve is closed. It will now be evident that the less the lap on the valve the more readily will the reversing engine respond to the action of the reversing handle. The gear is very easy to set out, the proportions of the lever A being the important part of the mechanism. Let the stroke of the piston be S inches and the travel of the valve-rod T inches, the long and the short arms of the floating lever must bear the same proportion as S to T. The cataract cylinders of reversers are sometimes charged with oil and sometimes with soapy water. The cataract valve must be accurately fitted and the lap very small, in no case exceeding $\frac{1}{32}$ inch, otherwise there will not be ready sympathy with the reversing handle.

PART II.

GAS ENGINE VALVES AND GEARS.

CONTENTS.—Mushroom Valves—Area of Valve Openings—Size of Meter—Beau de Rochas Cycle—Design of Cams—Relative Positions of Cams—Ignition Valve—Actual Position of Cams—Spiral Cams—Eccentric Exhaust Gear—Valve Diagram—Water-cooled Valves—Variations in Cycles—Governing—Modern Developments—Water Injection—Independent Compression—Westinghouse Engine—Tangye Engine—Nuremberg Engine—Köerting Engine—Oechelhäuser Engine.

Mushroom Valves.—The valves of gas engines are, for the most part, mushroom valves, and in large sizes they are sometimes made double-seated in order to ease the opening. The material is usually mild steel, with the spindles forged solid. A good radius at the root of the valve spindle where it joins the disc is advisable for reasons of strength, ease of manufacture, and to avoid eddies in the flowing gases. Unlike the valves of most steam engines, each valve has only one function to perform, and the pressure is always on one side. The exhaust and timing valves are actuated under pressure, but the air inlet and gas valves are only opened when the pressure in the cylinder is at or near that of the atmosphere. The simple functions of gas engine valves render the design of the valves themselves easy, at least for moderate sizes. The usual angle for the seat is 45°, and the width of contact need not exceed $\frac{1}{16}$ of an inch for valves up to 2 inches diameter, $\frac{1}{8}$ inch up to 4 inches diameter, and $\frac{3}{16}$ inch and over for valves above this size, increasing in width so that the maximum bearing pressure on the seat in no case exceeds 5,000 lbs. per square inch or thereabouts. These widths may, at first sight, appear too small, but in the gas engine all valves are seated before explosion takes place, and, if the gear is properly designed, they seat themselves very gently without any approach to a hammering action. In the case of a valve 6 inches in diameter with a seat $\frac{3}{16}$ inch wide, inclined at 45° and exposed to an explosion pressure of 400 lbs. per square inch, the bearing pressure on the seat is about 5,000 lbs. per square inch, which both a mild steel valve and cast-iron seat are well able to withstand without distress. With narrow seats the valves are ground tight without great labour, and they are not so liable to be prevented from closing by foreign substances, such as specks of carbon, getting on the faces.

Mushroom valves are said to be fully open when the lift is one-fourth the diameter, but actually the full opening of a valve like that shown in Fig. 164, is obtained with slightly less lift; because the spindle obstructs the opening below the valve when it is open, and there is no advantage in having the area round the circumference greater than that beneath the valve, because the cams may be designed to give, when once the valve is raised, the full lift before the piston has attained its maximum velocity, which is not always the case in a steam engine where the valves are driven by eccentrics.

Fig. 164.

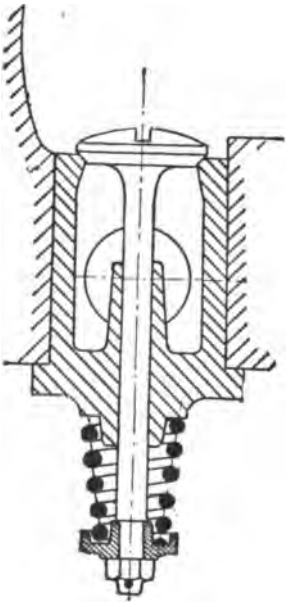

Area of Valve Openings.—Following on the lines usually adopted when dealing with the valve gear of steam engines the sizes of the valves and area of passages are first to be considered. In determining the area of the air-inlet pipe and passages, a calculated mean velocity of 90 feet per second may be allowed for, due to the piston's displacement. Therefore if

A = area of cylinder.
P = mean piston speed in feet per minute.

The area of the air-inlet pipe and passages

$$= \frac{A \times P}{60 \times 90}.$$

This velocity is low; but after engines have been working for some time a deposit forms upon the surface of the passage between the valve and the cylinder which contracts the area. In those engines in which the inlet valve opens directly into the cylinder (vertical engines are commonly so arranged) the above remark will not, of course, apply. The area of the opening due to the lift of the valve itself may be somewhat less, because it is not subject to diminution from deposit, and because the length of the contracted part is very small, consequently a mean velocity of 100 feet per second may be allowed, calculated on the maximum lift of the valve.

Size of Meter.—The size of meter required—that is, the number of 16-candle power lights a meter will supply, and which number is usually marked thereon—may be found as follows:—Brake horse-power × 3·4 + 5.

Since the rule does not take into account the gas consumption per brake horse-power it is only approximate, and latitude in

either direction is admissible. The size of the meter may also be found by assuming a probable gas consumption and allowing 6 cubic feet per size of meter.

Diameter of gas-supply pipes in inches = brake horse-power × ·027 + ·75, or size of meter in number of lights × ·008 + ·75.

With producer and suction gas these rules do not apply, the proportion of gas to air being then much greater than with illuminating gas. In such cases an area of from three to four times that given by above rules may be allowed.

The exhaust passages may be calculated on a mean velocity of 80 feet per second and a mean velocity of 95 feet per second past the valve face, calculated on the maximum lift and the piston's displacement.

Beau de Rochas Cycle.—The functions of the valves for the Beau de Rochas cycle, which embraces four piston strokes, are as shown in Fig. 165. The diagram is to a great extent self-explanatory, and a study thereof will render the action clearer than much description. The radial lines give the cank positions corresponding to each valve function, and the distance from the crank pin line of the lines describing the valve functions shows the lift of the valves to which they refer at any position of the crank.

A few words as to the considerations which determine the periods of the valve actions will be necessary before dealing with the design of the cams to effect such action. Referring to the diagram, the air valve is shown opening exactly at the end of the exhaust stroke. Some engineers advocate opening slightly earlier, but the advantage is questionable, as it allows a portion of the spent gases which may remain in the cylinder from the succeeding explosion to blow into the air passages. This will again be drawn into the cylinder on the next stroke. A cleaner charge is therefore obtained by opening exactly at dead point. The idea of lead on the air valve is to give a good opening early on the stroke, but this can be obtained quite effectually by a properly designed cam. The gas valve closes shortly before the end of the first or suction stroke, but the air valve continues open some five degrees after the crank has commenced the second or compression stroke. This timing sweeps the inlet passages clear of gas, and gives a denser volume of charge taken in, for the gases will continue to flow into the cylinder a little after the piston commences the compression, by reason of the momentum acquired during the intake stroke. The compression of the mixture is effected on the second stroke, when all valves are closed. In starting, however, this compression is a great inconvenience, hence most gas engines above 3 horse-power are usually provided with an extra ridge on the exhaust cam, which holds the exhaust valve open whilst a portion of the compression stroke has been performed. The action is shown on the diagram. The usual plan of carrying this action into effect is to have the cam so that either edge or ridge of the cam can be moved by hand opposite the exhaust lever roller. At starting

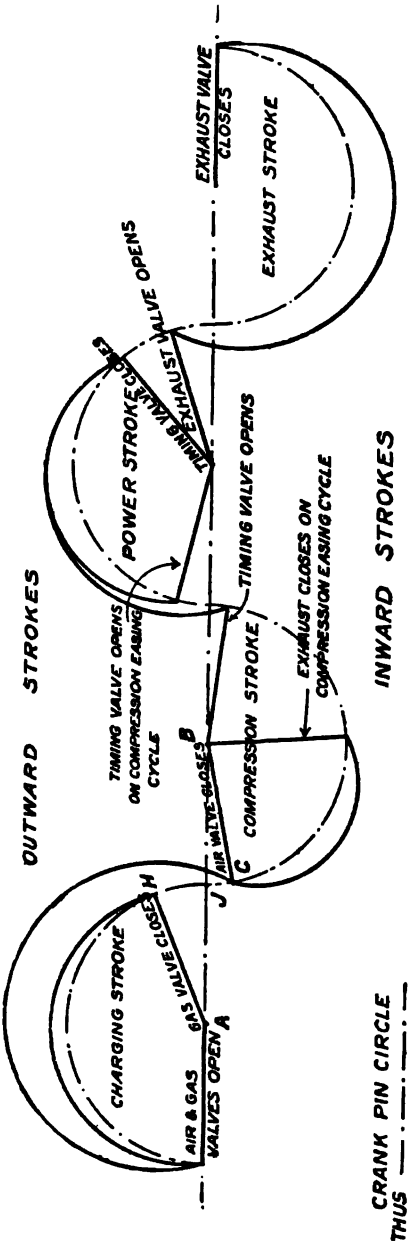
OUTWARD STROKES
INWARD STROKES
CHARGING STROKE
AIR & GAS
VALVES OPEN
A
GAS VALVE CLOSES
H
J
AIR VALVE CLOSES
C
COMPRESSION STROKE
B
TIMING VALVE OPENS ON COMPRESSION EASING CYCLE
POWER STROKE
TIMING VALVE OPENS
EXHAUST VALVE OPENS
EXHAUST VALVE CLOSES
EXHAUST STROKE
TIMING VALVE OPENS
EXHAUST CLOSES ON COMPRESSION EASING CYCLE
CRANK PIN CIRCLE THUS

Fig. 166.

the roller runs on the compression easing part of the cam, and as soon as the engine is fairly going the cam is moved along the shaft so that the roller runs on the ordinary working part. The approximate point for the opening of the timing valve is indicated (if timing valve there be), or in the case of electric ignition, the instant at which the spark should be produced. The exact instant is found by experiment, but as the timing of the valve is easily adjusted it is sufficient to know approximately at what period the event occurs, and the diagram shows the average setting. At starting, such a setting would be liable to cause premature firing, and start the engine in the wrong direction, an occurrence which is dangerous to the attendant. To obviate this an additional edge is provided on which the timing valve roller runs when the compression easing portion of the exhaust cam is in operation. These cams—namely, the timing and exhaust—are usually formed on one boss so that one movement by the hand changes the conditions of working of both. The exhaust valve opens before the end of the power stroke and closes at the end of the fourth stroke; the timing valve usually closes shortly after the exhaust valve has opened. With the Beau de Rochas cycle the valves are only opened once for two revolutions of the crank shaft, therefore cams having one projection on the circumference must revolve at half the speed of the crank shaft.

The setting of the valves and their position to each other have some relation. It is the practice of some makers of gas engines to delay the exhaust closure later than the opening of the air and gas valves, with the idea of getting a purer charge than would result from closing the exhaust valve exactly at dead centre; but in engines with this setting the inlet valve is not placed directly opposite the exhaust valve. For instance, in some Crossley engines the exhaust does not close until the crank has gone about 20° on the suction stroke, whilst the air and gas valves open before the beginning of the suction stroke. It is evident that with such a setting there would be risk of considerable waste of charge if inlet and exhaust valves were directly opposite, and the charge could blow straight from inlet to exhaust. In Crossley engines, therefore, the inlet valve is placed at the side of the compression chamber, whilst the exhaust valve is at the bottom.

Design of Cams.—The considerations which determine the shape of the cams are the moving period of the valve and a noiseless action, together with as rapid an opening as is consistent with easy working. Referring to the adjacent diagram, the outline shown in full lines gives a practically instantaneous opening to the full extent, and an equally rapid closing motion. Such a form, however, is mechanically impossible. The other extreme is shown by dotted lines, and is described by tangents drawn to the dead or concentric portion of the cam and the roller circles intersecting at a point A. A practical form of cam is to be sought in the space enclosed by these two extremes. There is another consideration

Fig. 166.

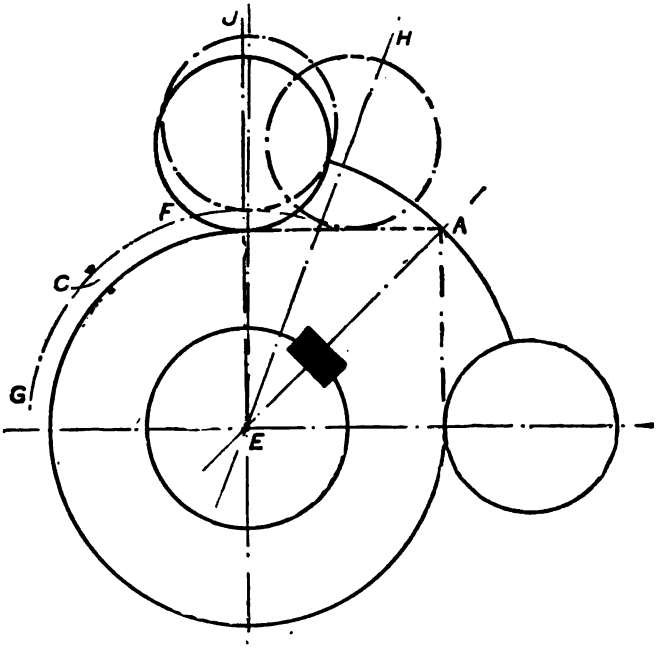

Fig. 167.

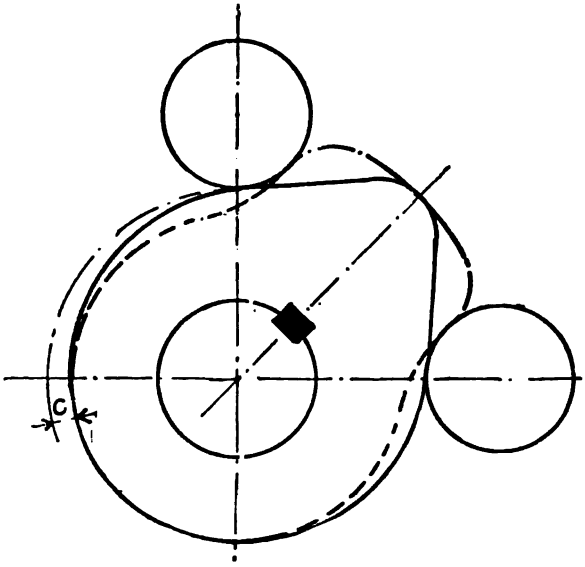

which influences the outline of the cams, the clearance between the valve stem and the lifting lever when the roller is running on the dead portion of the cam. This clearance is necessary to enable the valve to seat properly. It depends on the design of the roller lever whether the clearance is between the roller or the dead part of the cam, or between the lever and the valve stem, but the result on the design of the cam is identical. The cam shown in Fig. 166 would give an open period to the valve extending over an angle of 180° of crank movement, and with the form shown in full lines the clearance would not materially affect the timing, but with the form shown by dotted lines the open period would be considerably reduced. Let the clearance be represented by the distance C. From centre E describe the arc F G, and draw the roller circle tangent to F G and the dotted outline of the cam. In the case of the dotted cam, the effect of the clearance would be to delay the opening of the valve by the angle H E J and the closing would be accelerated by a like amount, and the difference in timing referred to the crank path would be twice this angle at opening and closing. The effect of this clearance would be eliminated by slightly increasing the angle embraced by the raised portion of the cam, or by a gradual slope from the dead portion to the active part. Referring to Fig. 167 in which the clearance has been exaggerated for the sake of clearness, the full lines show a form of cam modified to compensate for a clearance equal to C and the dotted lines show the same result obtained by increasing the size of the active portion. The full line cam would give much quieter running, for suppose the cam shaft to revolve at 100 revolutions per minute, and the dead or concentric cam to be $1\frac{13}{16}$ inches radius, having therefore a velocity of 95 feet per minute. The clearance is assumed to be $\frac{1}{4}$ inch, and as this clearance is worked off in a distance of 2 inches measured on the circumference of the cam, the striking velocity between the lifting lever and the valve stem is, neglecting the slight difference due to the greater radius of the striking point, $\frac{95}{8}$ = 12 feet per minute, or 2·4 inches per second, assuming the

Fig. 169.

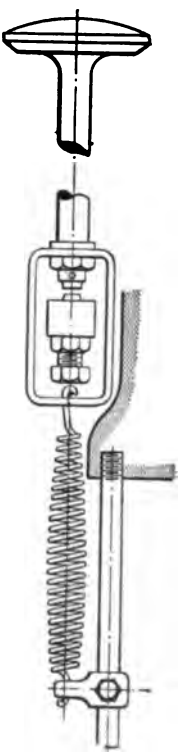

Fig. 168.

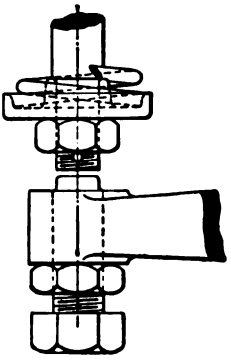

lifting lever to have equal arms. There is nothing destructive about such a velocity as this. In the case of the cam shown by dotted lines the striking velocity is four times as great. By increasing the circumference in which the clearance is worked off a very low striking velocity is obtained; but there is a practical limit in this direction, for with a low striking velocity the least alteration in the length of the valve stem, or a slight wear in the pins and wearing surfaces would sensibly affect the timing of the valve, and the difference in the temperature of the parts between just starting and after a few hours' run would sensibly affect the running of the engine. It would be no difficult matter to design a cam so that the variation of $\frac{1}{100}$ part of an inch in the length of the valve stem or wear in the pins would affect the timing by

Fig. 170.

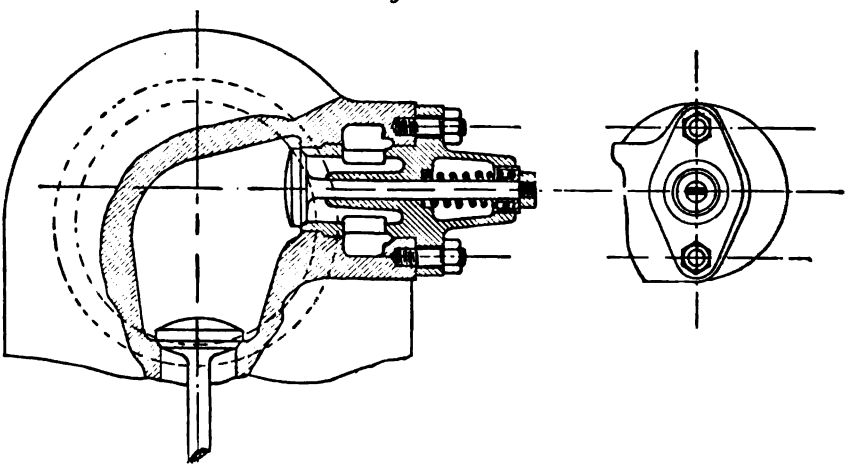

10° of crank movement. A good average practice is to make the clearance from $\frac{1}{32}$ to $\frac{1}{16}$ of an inch, according to the size of the engine, and to arrange the cam to work off this amount in a circumference equal to sixteen times the clearance. Adjustment of timing is effected by a set screw in the end of the lifting lever, as shown in Figs. 168 and 169. Raising the screw hastens opening and delays closing; lowering has the opposite effect; and when the meeting and leaving lines of the cam are the same, any given degree of adjustment affects opening and closing to an equal extent. The object of the gradual slope to the active part is liable to be defeated by careless adjustment; for when the set screw is too low the cam will not strike until the roller is running on the raised part, when the velocity of impact will be much increased, and a clatter will be the result. An improved method of arrang-

ing the springs and lifting piece on the valve lever is shown by Fig. 169; the advantage of which is that it allows of a longer and lighter spring, together with a convenient means of adjusting the tension.

In many engines the inlet valve is placed at the side of the combustion chamber, and has a horizontal movement. The closing spring is also enclosed in a bonnet, as shown in Fig. 170. This is a very neat arrangement, and brings the valve in a convenient position with reference to the cam shaft, and, as pointed out in a previous page, such a position is necessary with certain valve settings.

Relative Position of Cams.—Fig. 171 illustrates the method of designing the relative positions of the cams and their respective forms. In this diagram the rollers are supposed to revolve round the cam shaft, the cams being stationary. This simplifies matters and dispenses with the use of tracing paper, templates, and pricking the cam positions through. The diagram is divided into quadrants, whereof B A C refers to the suction stroke, C A D to the compression stroke, D A E to the power stroke, E A B to the exhaust stroke. The rollers are supposed to be in line with each other looking end on the cam shaft. This is not what would occur in actual cases, but it is convenient for the purpose of illustration. On the line A B produced draw a circle to represent the roller of the air cam. The distance from the point A to the centre of the roller circle will be equal to the radius of the roller plus radius of concentric part of cam plus clearance between roller and cam, or between valve lifter and valve stem referred to the distance from the centre of the roller to the pivot of the lifting lever. The gas cam opens at the same instant (see Fig. 165), therefore the roller for the gas cam should be drawn on the line A B. The gas cam closes at H (Fig. 165), which, in the present diagram, is about 22° angle of crank from the end of the stroke. Make the angle H A J (Fig. 171) equal to half the angle H A J (Fig. 165), and at the proper distance from the centre A, and with the radius of the gas cam roller describe a circle. Knowing the required lift of the gas valve the form of the cam can then be determined. The outline must touch the two circles thus drawn and should be designed on the lines described in a previous page. The air valve closes after the end of the suction stroke, and therefore the centre of the closing roller circle position will fall in the second quadrant. Make the angle C A F (Fig. 171) equal to half the angle J B C (Fig. 165), and at the proper distance from A describe the circle. The height of the raised portion is governed by required lift of the valve, and the boundaries of the outline are then defined. The exhaust and compression easing cams are shown, and the method of arriving at their outlines will be inferred from the previous description.

The form of the timing valve cam differs considerably from the others. It is an essential feature that the ignition valve should open very suddenly to ensure prompt firing. The ignition valve is

Fig. 171.

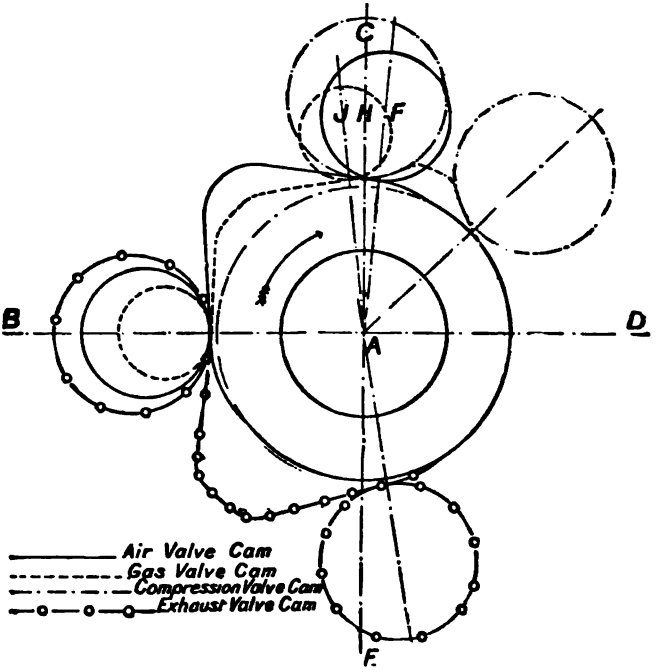

Fig. 172.

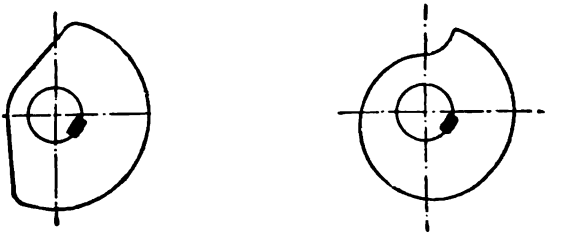

Fig 173.

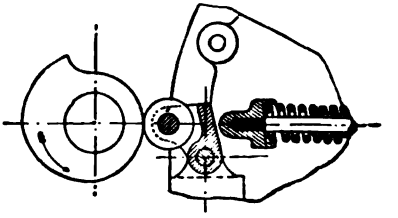

therefore generally arranged so that it is held open by a spring, except at the periods when the cam holds it closed. This enables an almost instantaneous opening to be obtained without undue stress and rattle. Fig. 172 shows two cams suitable for giving a rapid motion to the ignition apparatus, and Fig. 173 shows the connection between the cam and the valve spindle.

Ignition Valve.—The action of the ignition valve is quite different from that of the other valves, and to understand its action and construction fully a detail drawing and description are necessary. Referring to Fig. 174, which shows the hot tube

Fig. 174.

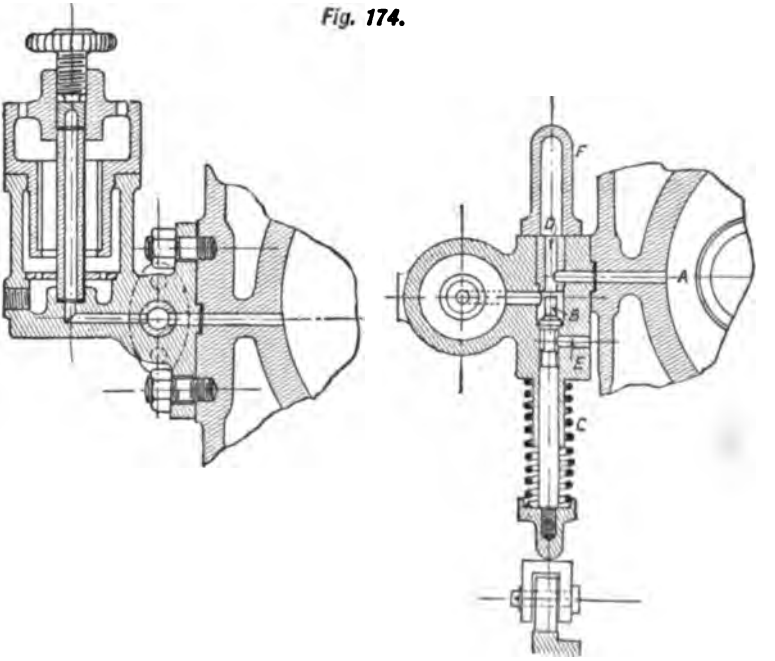

and ignition valve chamber in section, the passage A is in communication with the compression space at all times. The ignition valve B is under the control of the ignition cam, and during the compression stroke it is pushed forward so that the turned stem fits in the bush D, thus isolating the hot tube from the cylinder. At the proper instant the step on the cam passes the roller, and the valve at once flies open under the influence of the spring C, and the mixture is fired. As the valve springs open it closes the passage E. This passage communicates with the atmosphere, and its function is to pass the exhaust gases remaining in the hot tube and passages from the previous charge. When the ignition valve has closed the passage between the hot tube and the cylinder, the tube and its

passages are open to the atmosphere because the ignition valve is then lifted from its bevelled seat over the passage E; the spent gases, therefore, rush through E to the atmosphere. This prevents the accumulation of burnt gases in the region of the ignition tube, which would have a tendency to produce miss-fires. The hood F is provided to form a receiver for burnt gas, and when compression takes place the spent gas remaining in the passage A from the previous explosion is forced to the top end of the hood to give place to the cool, inflammable charge which is ready to rush to the hot tube as soon as the ignition valve flies open.

From the above action it will be obvious that a rapid opening movement is essential, for, in order to prevent leakage during the power stroke, the interval between the opening of passage A and the closing of E must be less than the time occupied by the charge rushing through the hot tube and passages, firing, and the return of the flame to the ignition tube. The ignition cam must, therefore, be designed accordingly, and the spring be of sufficient strength to impart the necessary inertia to the valve.

Fig. 175.

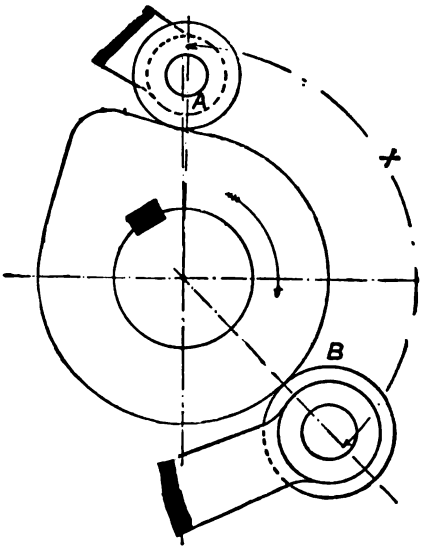

Actual Position of Cams.—It has been previously said that Fig. 171 shows the cam positions relative to each other, assuming that all the rollers are opposite each other looking in a direction parallel with the axis of the cam shaft. Actually this is rarely the case; but, having determined the assumed relative positions, the actual positions are soon found when the arrangement of the rollers has been settled. In Fig. 175 let A represent the air-valve roller

and B the exhaust roller. The arrow shows the direction of rotation, from which it will be seen the actual angle of the exhaust cam will be X degrees in advance of the air cam from the position obtained by assuming both cams to be opposite.

Spiral Cams.—Sometimes the cams take the form shown by Fig. 166. The considerations which were taken into account when dealing with the ordinary type will apply equally to this style of cam. The angle embraced by the curved part of the groove is equal to twice the open period of the valve measured in angles of crank movement.

Fig. 176.

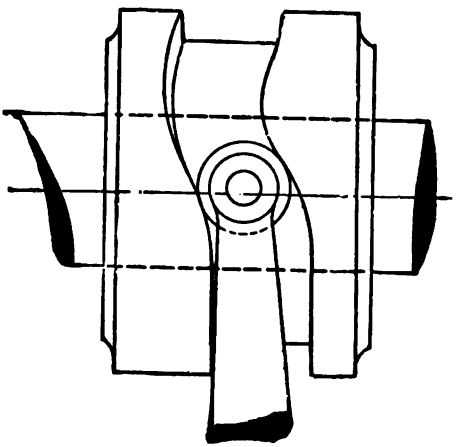

Eccentric Exhaust Gear.—In place of cams eccentrics may be used, but the gear must be designed to suit the peculiar circumstances which then obtain. It has been previously explained that any particular valve of a four-cycle engine is only operated once in four strokes, and hence only about one-quarter of the eccentric movement is available for valve action; and, further, the contact must be made when the eccentric is moving rapidly. These objections, however, may be surmounted by careful design in the levers. Referring to Fig. 177, which shows the exhaust gear of a large gas engine of the writer's design, the point of contact is made near the boss of the lever A, at a very slow speed. As the eccentric-rod rises, the point of contact moves rapidly to the right, and by reason of this action, although little more than one-fourth of the eccentric motion is useful, the eccentric is not of great size. Moreover, the gear is silent in action, and, as the eccentric, rod, levers, and valve spindle are in one plane, there are no cross strains, and the gear is mechanically superior to a roller and cam arrangement with its small wearing surfaces and jerky action. The use of eccentrics is becoming more common, especially in large engines, and it is probable that they will displace cams to a large extent.

In this figure the lay shaft has been shown at right angles to its real position parallel to the centre line of the engine, the object being to show the position of the exhaust pipe and cylinder end, as well as the cooling arrangements, in one drawing.

Fig. 177.

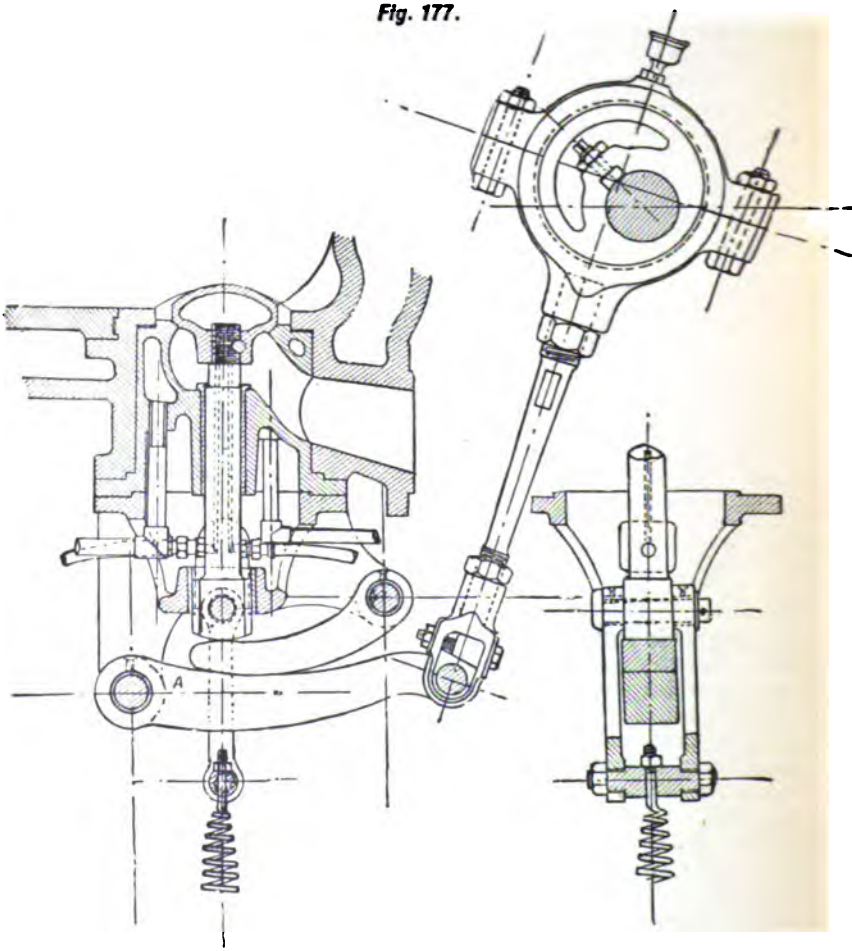

Valve Diagram for Eccentric Gear.—The useful throw of an eccentric for actuating any valve of a four-cycle gas engine is obtained in a similar manner to the active portion of a cam. Referring to the cycle diagram in Fig. 178, let A be the opening and B the closing point of any valve. In the eccentric diagram to the right make A C B equal to $\frac{\text{angle X}}{2}$ and join A B. The versed

sine of angle A C B = D E is the effective travel of the eccentric-rod, or that travel which is useful in giving opening to the valve. By carefully arranging the lever systems, a wide range of valve lift may be obtained from one size of eccentric, thus effecting economy in patternmaking; and, if the rods are led off at the proper angle, one eccentric may be used to drive several valves.

Fig. 178.

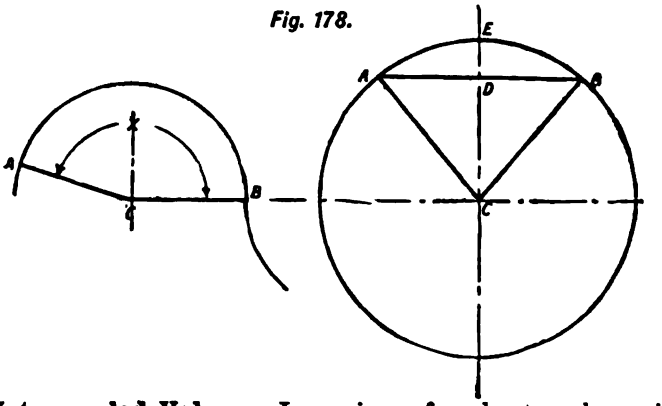

Water-cooled Valves.—In engines of moderate or large size, and particularly those which operate under the throttling system of governing, and consequently do not benefit by the cooling effect of idle strokes, water-cooled exhaust valves are almost essential. Examples of such valves are seen in Figs. 177, 182, 186, and 187. In Fig. 177 the spindle is made of large diameter compared with the size of the valve, and two small holes are drilled down it. The water supply is carried to the spindle by flexible pipes. Arrangements are also made to circulate water through the valve seat, which consists of a loose casting accurately turned to fit the hole in the breech end provided to receive it. The method of circulating water in the Crossley balanced valve will be seen from Fig. 182. Figs. 186 and 187 show water-cooled valves for a Westinghouse vertical and a Tangye horizontal engine.

Variations in Cycles.—The cycle above described, together with the hit-and-miss system of governing, may be regarded as the standard cycle now in use for medium-sized engines, but the deviations from this standard are numerous and radical. First in the matter of valves. Some small engines have no timing valves, the ignition being regulated by adjusting the position of the flame round the hot tube. Others again have electric ignition. In many small gas engines the air inlet valve is not operated mechanically, but lifted by the suction of the piston, but this plan reduces the power of the engine to some extent by preventing the cylinder taking in a full charge at atmospheric pressure, and there is consequently a drag on the piston during the suction stroke. Consequently automatic inlet valves are not used on large engines where economy is important.

Governing.—In the matter of governing there are several methods in practical use. The hit-and-miss principle is at the present time the most economical, but in respect of giving a uniform speed of rotation to the crank shaft it is anything but an ideal method. The gas-throttling method, whereby the quality of mixture is regulated by the governor according to the load, gives more regular turning at the crank shaft; but there is some difficulty in obtaining prompt firing of the weak mixtures, and, if this method be adopted, electric ignition becomes necessary. Also, in the case of suction or producer gas, where the charge is not so inflammable

Fig. 179.

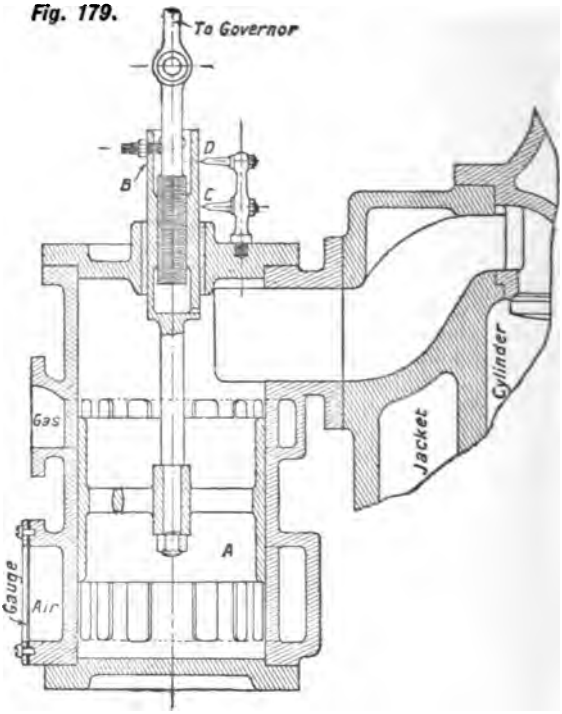

as coal gas, electric ignition is the only satisfactory type. A further defect of this system is that it gives a limited range of governor control, beyond which miss-fires and pre-ignitions occur.

Another method of governing is to vary the amount of mixture admitted to the cylinder, the quality being constant—a system identical with the action of a throttling governor of a steam engine. The objections to this system are the excessive gas consumption on light loads and the resistance caused by reduced suction pressure on the charging stroke.

With the constant-volume system, the type of valve illustrated by Fig. 179 is sometimes used. The cylindrical valve A is under

governor control, and as it moves upwards the gas is throttled, but the air passage is increased, thereby maintaining a practically constant volume. At full power the governor valve is in bottom position, and the bush B is adjusted to give the strongest explosion. The governor then adjusts the mixture for all other positions. A stop should be provided to limit the rise of the governor beyond that position which gives a certain ignition to the charge. In the present example a locking arrangement is provided, and also index fingers, C and D, which show the amount of air and gas port open for all positions of the bush B.

In the throttling system the governor gear is still simpler, a throttle valve of any convenient construction and a hand-regulated gas valve to regulate the proportion of gas to air being all that is required.

Another system is to give governor control to the period of admission of gas, but always to close at the same period—namely, the end of the suction stroke. This, in a slightly modified form, is the system adopted in the Koerting and Oechelhäuser engines, a reference to which will be made later.

A system which has recently been brought out by Crossley Brothers is to govern by means of an air-inlet throttle valve. Three inlet valves are provided for each cylinder, one of which admits pure air, and is operated from the cam shaft and receives a constant motion; another admits inflammable mixture, and is likewise driven from the cam shaft. The third is a disc throttle valve under the control of the governor. Under this system the throttle valve, which passes only pure air, is only partially opened at heavy loads, and the suction of the piston therefore draws a heavy charge of mixture; but on light loads the throttle is opened wider, and therefore a less amount of mixture is drawn in, and the explosions are consequently weaker.

Fig. 180 shows the arrangement of cut-out governing gear adopted by Messrs. Robey and may be taken as representative of the class. The governor is of the ordinary centrifugal type, similar to that used on this firm's steam engines, and is driven by bevel gear from the cam shaft. A roller is mounted on a long pin B, in the valve lever C, and this roller is free to travel along the pin under the influence of the governor lever. When the governor is in its lowest position the roller runs upon that part of the cam which gives the necessary opening to the gas valve, but when the governor has attained a certain position the roller is moved along the pin B so that it runs on a circular portion of the cam, and thus imparts no motion to the valve lever, whereby the gas is prevented from entering the cylinder on the suction stroke. The governor is provided with a speed adjuster A which enables the engine to run at any desired speed within certain limits. It will be noticed that the roller has a knife edge. Now the gas cam has a nick running partly round the dead or concentric portion of the circumference, passing over the raised portion, the object of which is to prevent the roller running off the raised part of the cam after it has once begun to travel on that part of the cam.

Fig. 181 shows a cut-out arrangement designed on a different plan. Here the roller actuating the gas valve lever B runs upon the cam A at all times, and B has a double oscillation each revolution of the cam shaft. The upper end of B carries a thin steel blade, the edge of which is knifed, as shown in the enlarged view. Interposed between this blade and the valve spindle of the gas valve C is a floating blade, carried by a suspension-rod from the governor lever, and this blade is nicked on one edge to

Fig. 180.

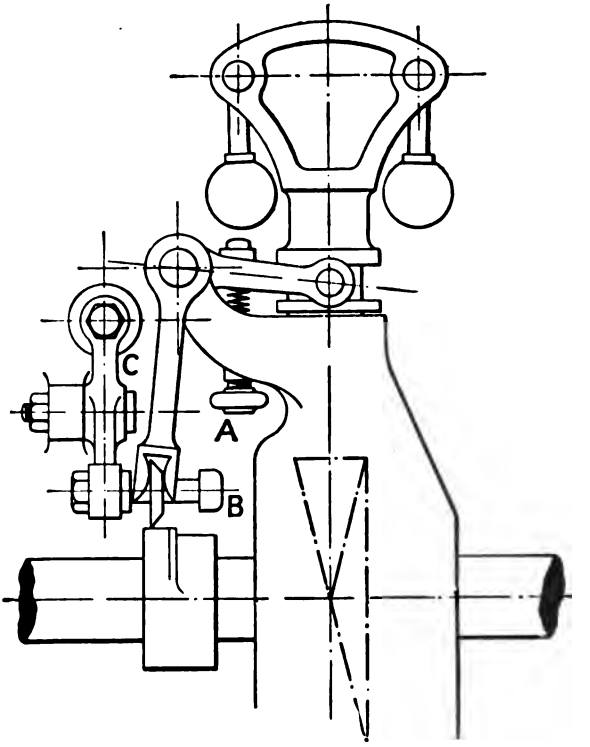

correspond with the knife edge on B. When the governor is revolving at normal speed, or any speed below normal, the blade on B opens the gas valve through the interposition of the floating blade, but when the speed is increased the latter is lifted out of the plane of the blade on B, and therefore the gas valve is not opened.

From this description it will be seen that the governor has absolutely no other resistance to overcome than that of its own friction; and it differs from a steam engine governor in that a hair's breadth in the movement of the floating blade is sufficient to

change the power developed in the cylinder from maximum to nil, and *vice versâ*. The governor always revolves in its bottom plane with the sleeve resting on the governor bracket, except when the mean speed is exceeded, and then the slightest movement lifts the

Fig. 181.

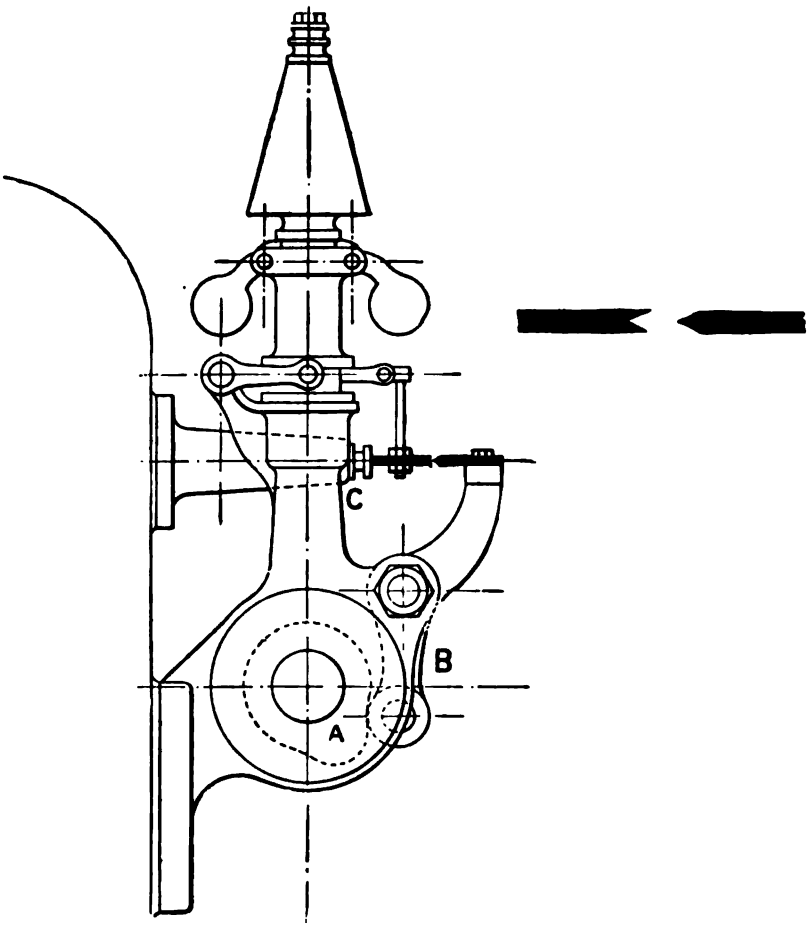

blade out of the reach of the knife edge. The object of the nick is, of course, to make the action decisive. Once the blades are engaged they remain so until the cam has released the lever B; there is no slipping off when once the governor has determined that a charge of gas shall be given to the cylinder.

Modern Developments.—The present tendency in gas engine practice is to increase the degree of compression. This gives increased economy in gas consumption, and the power of the engine is greater for a given size of cylinder. Advance in this direction, however, is limited by reason of premature firing, which is liable to occur from the heat generated by compression. This heating is also augmented by the high temperature of explosion, wherefore it becomes necessary to water-jacket the piston as well as to provide a water core in the exhaust valves. In large engines the force required to lift the ordinary unbalanced mushroom valve may be several tons, and it is therefore customary to employ balanced valves. Fig. 182 shows a recently adopted type with arrangements for water cooling.

Fig. 182.

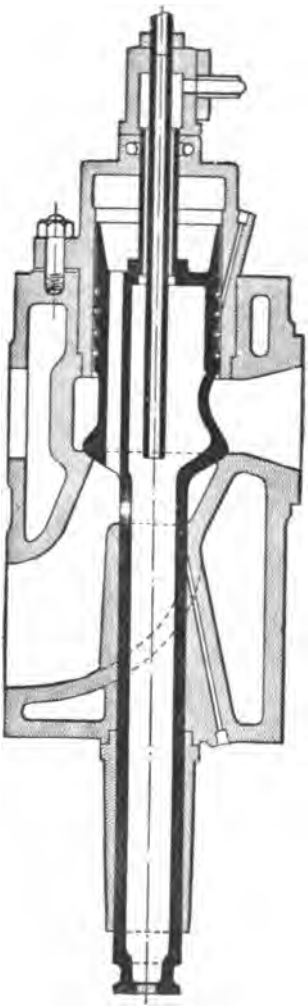

Water Injection.—Water injection is now frequently applied, the objects being to keep down cylinder temperature, to prevent pre-ignition, to soften the blow of the explosion, and to allow of higher compression. In arranging apparatus of this kind, it is advisable to admit the water in the form of a spray, so that it becomes quickly evaporated and does not come in contact with the cylinder walls.

The Crossley injection apparatus is clearly shown by Figs. 183 and 184, which are taken from *The Engineer*. The small needle valve is supplied with water from the circulating water pipe, and the drip can be regulated to a nicety. The drip falls into the cup W (Fig. 183), and is drawn into the cylinder during the suction stroke past the valve shown in detail by Fig. 184. This valve is supported by a light spring, and, of course, remains closed except during charging strokes. The arrangement in the drawing shows the position of the apparatus in relation to the inlet and exhaust valves, and gives a good idea of its size in proportion to the engine. It is here shown combined with

the indicator connection, thus avoiding the necessity of another hole in the combustion chamber.

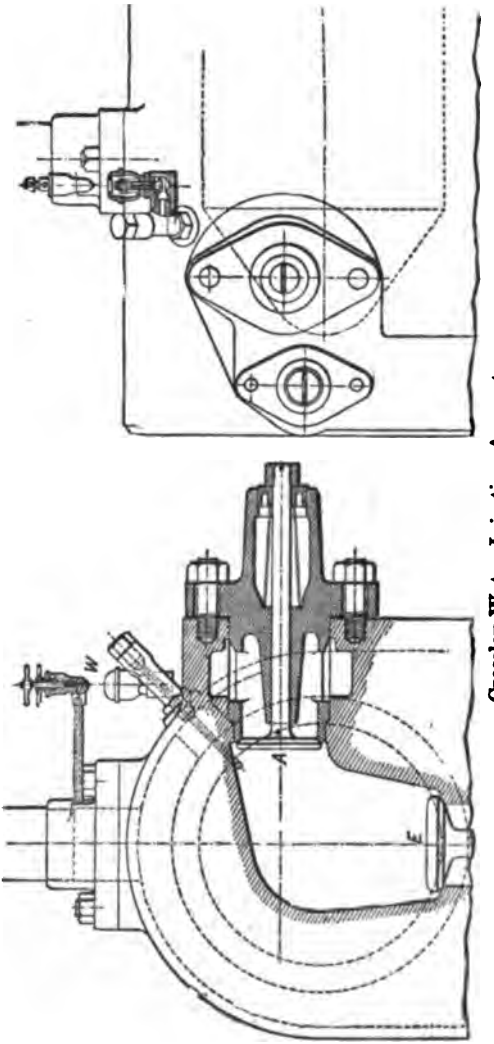

Fig. 183. Crossley Water Injection Apparatus.

Independent Compression.—In order to overcome the difficulty of premature explosions, and to obtain an impulse every alternate stroke on each side of the piston, the writer took out a provisional specification (16,626), 1903, where, in the case of

a battery of gas engines, the air and gas would be supplied under high pressure from independent compressors. The air and gas would be carried in separate mains, from which the gas engines would draw their supply after the manner of a battery of steam engines. By this arrangement there is practically no limit to the degree of compression, and further, the expansion of the gases after explosion may be carried down to 14 or 15 lbs., or lower, if necessary. A rotating air and gas valve was designed to regulate the admission, a sketch of which is given herewith. The valve ports are so disposed that towards the end of the exhaust stroke a blast of cold compressed air is blown into the cylinder to cool the surface, and clear out the residue of the

Fig. 184.

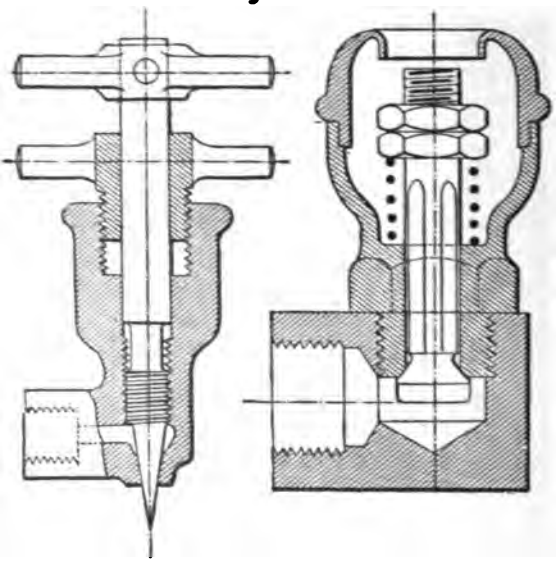

Water Valves.

exhaust. The governing function is effected by raising or lowering the valve, so that the amount of mixture entering the cylinder is varied according to the load, but the quality is constant. The rotating valve would not be directly under the control of the governor, because the force necessary to actuate it would be too great, but it would be operated through a relay. Various gas engine makers were approached on the subject without result, and the patent has now lapsed. It is probable, however that developments will proceed along these lines at a future date.

Westinghouse Engine.—The general disposition of valves and the arrangement of gearing in a few modern engines are

shown by Figs. 186 to 188. Fig. 186 shows two views of a Westinghouse engine of the three-cylinder vertical type. It will be seen that in its general outline the engine closely resembles the high-speed enclosed forced-lubrication steam engine. The Westinghouse gas engine works on the Beau de Rochas cycle, and the cam shaft is driven from the crank shaft by spur gearing with a ratio of 2 to 1. Both inlet and exhaust valves are placed to one side of the cylinder and not in the covers as formerly, the advantage of the arrangement here shown being that the pistons are accessible by simply removing the covers without disturbing the valve arrangements. The governing is on the throttling principle, and there are no cut-out strokes. The air and gas enter the engine by separate passages, and are thoroughly mixed before reaching the throttle valve Y. This valve is under the direct control of the governor, and the mixture is throttled in its passage to the engine exactly as in the case of a steam engine with a throttle governor. Following the usual practice on engines of moderate size the exhaust valves are water-cooled. The pistons, however, are not provided with circulating water, which is considered essential for satisfactory work by some engineers.

Fig. 186.

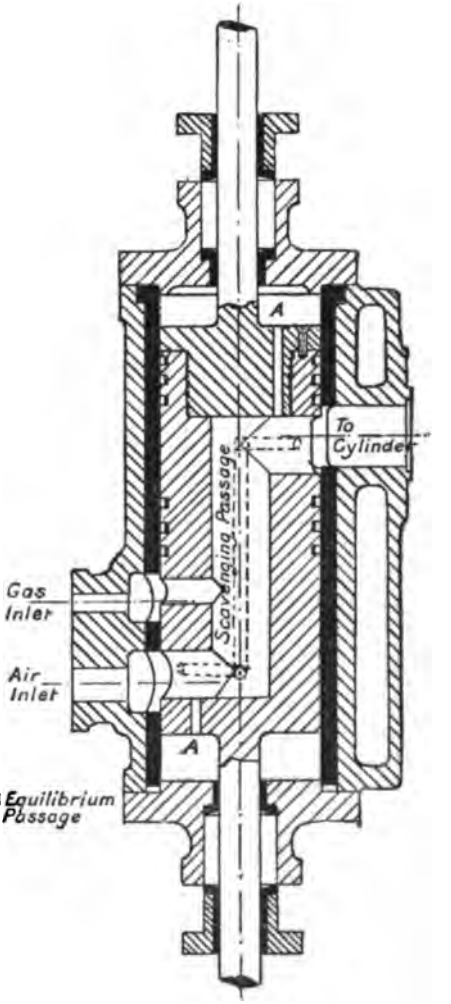

Tangye Engine.—The Tangye engine is shown by Fig. 187;

it is of the single-cylinder horizontal type working on the Beau de Rochas cycle. The piston is water-cooled, as well as the exhaust valve E. The valve A is for air and gas admission, whilst G regulates the gas supply. The arrangement of the gear for working the various valves will be followed from the illustration. The engine being intended for working with suction gas the ignition is electric, and the timing gear is seen in the end view, operated by the rod K. The principle of this gear is similar to the trip gear of a steam engine. The release of a catch makes a spark in the combustion chamber, and the timing of the spark can be regulated by hand as the engine is running. The hit-and-miss gear is clearly shown, and its operation will be followed from an inspection of the end view.

On the Continent the development of the large gas engine has been rapid, and there have been evolved a number of engines which, in design, are unlike those of English origin. The double-acting engine is common, and the external appearance bears a close resemblance to a steam engine with drop valve gear.

Nuremberg Engine.—Fig. 188 shows a section through the cylinder of an engine made by the Vereinigte Maschinen-Fabrik, Nuremberg. The valves at the top corners are for admission of the mixture, and are timed to open at the beginning of the intake stroke. The cycle being the Beau de Rochas, these valves are driven from a half-speed shaft, and the cams are placed at 90° apart. The method of driving these valves is by means of eccentrics.

The inner valves on the top of the cylinder are of the lantern type and are under governor influence. The principle of governing is that of constant quality but variable quantity, so that these valves, through which the piston draws its charge, have a variable lift as demanded by the load, the quality of the mixture having been previously determined by an adjustable valve.

The exhaust valves are of the usual construction, and are driven by cams and closed by springs in the usual manner. Both valves and seats are water-cooled. With respect to the cylinder and covers their ample water spaces will be noted; and another feature, by no means peculiar to the Continental engine, is that there is no loose liner for the cylinder. The piston, as in all double-acting engines, is also water-cooled.

Koerting Engine.—The well-known Koerting engine is of the two-cycle double-acting type, having separate pumps which deliver air and gas to the working cylinder under a slight pressure. The engine has no exhaust valves, their function being fulfilled by the piston over-running exhaust ports in the centre of the cylinder. The length of the piston is, therefore, equal to the stroke minus the width of the ports. The governing is on the gas throttle system, and is effected in the following manner:—The pumps first deliver pure air to the cylinder and later a mixture of uniform quality, the quantity of which is regulated by the governor in accordance with the load. The cycle of operations is depicted on the diagram

Fig. 188.

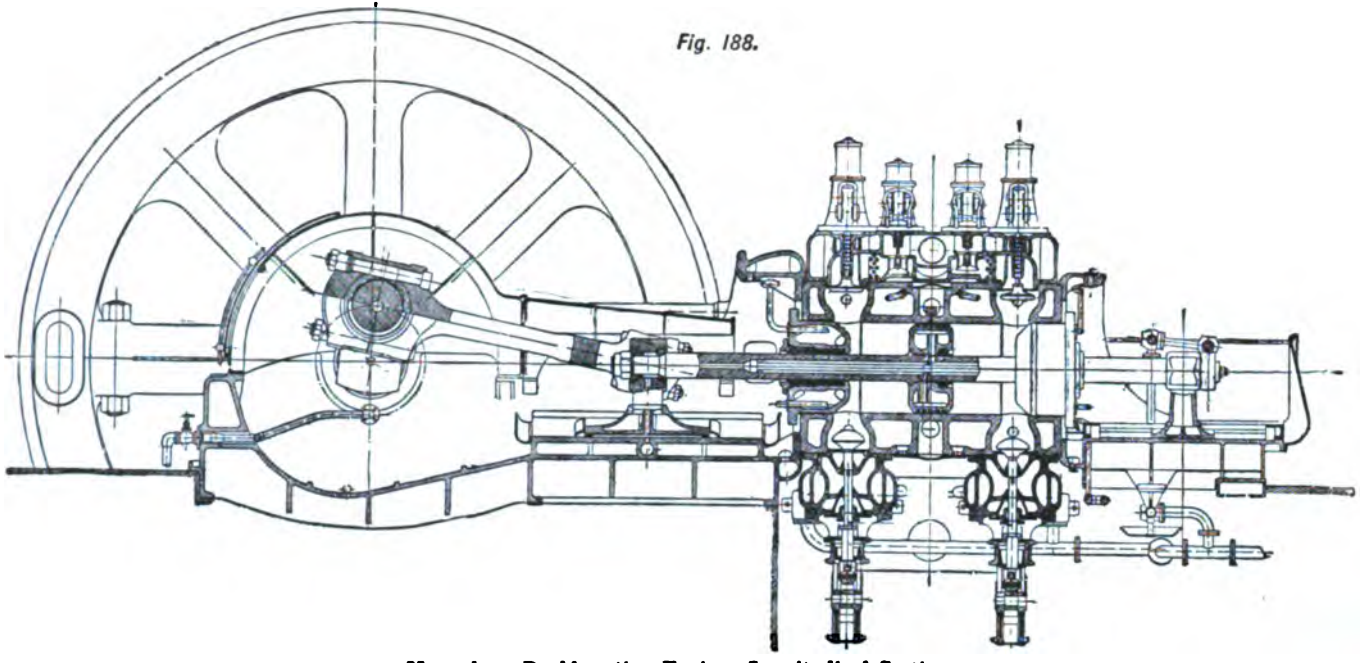

Nuremberg Double-acting Engine—Longitudinal Section.

(Fig. 189). These engines are of the horizontal type. For the power developed they are, of course, much smaller than the four-stroke cycle single-acting engine, but they are complicated by reason of the air and gas pumps.

Oechelhäuser Engine.—In the Oechelhäuser engine* the charge is fired between two pistons working in opposite directions in a long open-ended cylinder. These pistons are coupled to a three-throw shaft by side rods and connecting-rods. One great advantage of this arrangement is that difficulties in the construction of the combustion chamber are entirely avoided, since the pistons themselves form the containing sides of the combustion chamber. This engine has a separate pump which delivers the charge to the working cylinder at a pressure of 5 or 6 lbs. per square inch. The governor regulates the amount of mixture retained in the cylinder before compression. As in the Koerting engine, the valve gear is simplified by the fact that there are no exhaust valves, the pistons uncovering circumferential ports as they approach the end of their outward strokes.

Fig. 189.

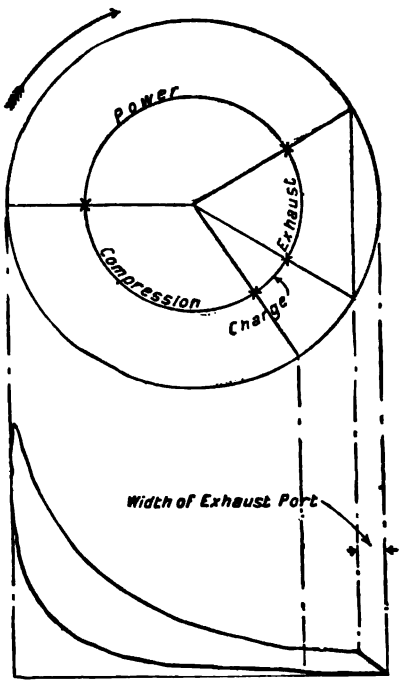

* For a full detailed description of the Oechelhäuser engine see *Engineering*, vol. lxxxi.

PART III.

AIR COMPRESSOR VALVES AND GEARING.

CONTENTS.—Area through Valves—Automatic and Positively-driven Valves—India-rubber Valves—Hinge Valves—Coiled Valve - Mushroom Valve—Reidler Valve—Ring Valve—Ingersoll-Sergeant Compressor—Slide Valves—Corliss Valves—Köster Valve Gear—Unloading Devices—Fraser & Chalmers' Air Governor.

Area through Valves.—The automatic valves of air compressors should open easily, close rapidly, be free from dancing on the seat, give the smallest possible clearance, and offer a large opening for the passage of air. The area of the inlet passages may be designed for a mean speed of 90 feet per second, and the valves should be arranged to give the necessary area without much lift, or banging and dancing will result.

It has been a common practice to make the outlet valves of compressors of equal area to the inlet valves, but a little consideration will show that if an area giving a velocity 90 feet per second is ample for the suction valves, a smaller area may be given to the outlet valves. In the first place, the intake valves remain open practically the whole length of the stroke, and must therefore give sufficient area to pass the air when the piston is travelling at its maximum velocity. It is also clear that any throttling of the air on the intake not only represents dead loss of power, but reduces the capacity of the compressor and also the maximum pressure at which it will deliver air. Delivery valves work under entirely different conditions. Except in the case of blowing cylinders, and those for supplying air at a low pressure, the outlet valves do not open until the piston has passed its central position, and is moving at a reduced velocity. These considerations show that the practice of designing the area of the delivery valves solely with regard to the piston displacement is wrong. In the case of the action of an air compressor delivering at 100 lbs. per square inch by gauge, the delivery valves will not open until the piston has performed about 90 per cent. of its stroke, and the piston velocity, when delivering, is only moving at one-fourth of its mean speed; therefore it follows that in such a case an outlet valve, having half the area of the suction valves, would give less resistance to the flow per unit of time, even taking into account the increased density of the air, whilst the action is only one-tenth the duration of intake. Another consideration points to the advantage of small delivery valves, and that

is the severe banging to which they are subject if they do not close promptly, and it is clear that small valves will seat more rapidly than large ones because their inertia is less. With suction valves no such severe action takes place; the pressures at which they open and close are always low, and the high pressure does not come upon them until they have been some time on their seat. The matter of clearance is of great importance in high-pressure compressors, and it is no easy matter to design a single stage compressor with a satisfactory volumetric efficiency at 150 lbs. per square inch, and at the same time provide adequate suction and delivery passages and valves. This consideration emphasises still further the advantage of a small delivery valve area.

Automatic and Positively-driven Valves.—The valves of air compressors may be automatic or of the positively-actuated type. For a given valve setting the positive valve compressor will never deliver air below a certain pressure, no matter whether the receiver pressure is nil or a maximum. The indicator diagram from a compressor having positively actuated delivery valves, when commencing to pump into a receiver at atmospheric pressure, will be similar to the diagram in full lines, Fig. 190, and succeeding diagrams taken as the pressure in the receiver rises would follow somewhat on the lines shown dotted in the figure, until the delivery line became practically horizontal. After this a change would take place in the action, and when the delivery valve opened the fluid would for a time flow into the cylinder. This is shown by the slope at A. A series of diagrams taken from a compressor with automatic valves under the above conditions would resemble those shown by Fig. 191. It will be seen that the difference in the area between the first and the final diagram is much greater than in the previous case. Another interesting point in connection with air compressor diagrams is that in the case of a positive delivery valve compressor there is a certain pressure beyond which it is disadvantageous to work, and that pressure is reached when the pressure in the receiver is such that on the opening of the delivery valve there is a flow from the receiver into the cylinder. The effect of this momentary reflex action is to throw the pressure of the receiver

Fig. 190.

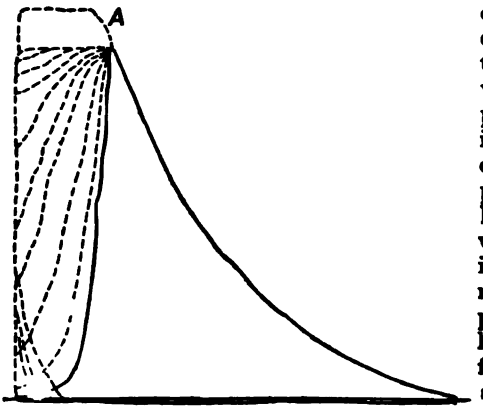

upon the advancing piston, and the resistance offered during that reflux action is dead loss.

The action of the suction valves of a compressor requires some consideration before a satisfactory type can be designed. With an automatic valve the time of opening depends on the clearance volume in the cylinder and the delivery pressure. At the end of the compression stroke the clearance space is filled with air at the receiver pressure, and this must expand down to atmospheric pressure before the suction valve will open to admit a fresh charge. It is clear that there is a certain pressure at which a compressor will cease to deliver any air whatever, and that point is reached when the pressure in the receiver is so high that the compressed air in the clearance space simply expands down to atmospheric pressure just as the piston reaches the opposite end of the cylinder. That is to say, a compressor having a clearance volume of 10 per cent. would not deliver air at a greater pressure than about 150 lbs., but would simply compress or expand the same volume of air each cycle, just in the same manner as the air buffer of a single-acting high-speed engine. Both suction and delivery valves would always remain closed, and the power expended on the compression stroke would be mostly recovered on the expansion stroke. The effect of clearance and delivery pressure on the opening of the suction valves is shown in indicator diagrams by the position and form of the heel of the figure, and, referring to the cards (Figs. 190 and 191), it will be seen that the opening of the suction valve is delayed as the pressure rises, showing that the volumetric efficiency of a compressor decreases in an inverse ratio to the pressure. In an automatic valve compressor this period of opening requires no attention or adjustment from the attendant engineer, but with a positively actuated suction valve there is a particular point for a particular pressure, at which the valve must open in order to avoid loss. If the opening be too late there will be a partial vacuum formed during the suction stroke which wastes the power, whilst premature opening allows an escape of the air in the clearance space before it has rendered up its energy to the piston on the suction stroke.

Fig. 191.

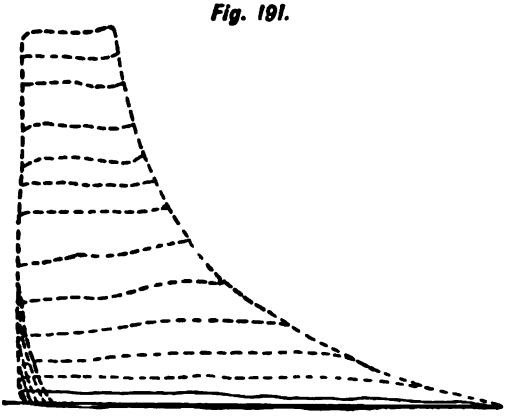

The diagram in Fig. 192 shows late suction opening and the lost power is represented by the shaded area, and Fig. 193 is a diagram showing premature opening, the loss also being indicated by a shaded area. It would therefore appear from these considerations that for a certain valve setting a positive suction valve compressor is only efficient at a certain pressure, depending on the clearance volume. The object of a positive suction valve is to provide an unrestricted flow into the cylinder, but, if fitted on a machine which operates at varying pressures, it will be a wasteful type of valve unless automatic means are provided to delay opening as the pressure increases.

From these considerations it would appear that a positive suction valve compressor is best adapted for a machine working at a constant pressure for long periods. Where the work is intermittent and the pressure variable, the mechanically-controlled valve is at a disadvantage because of the incorrect timing of the valve for all pressures, except the particular one which allows the proper

Fig. 192.

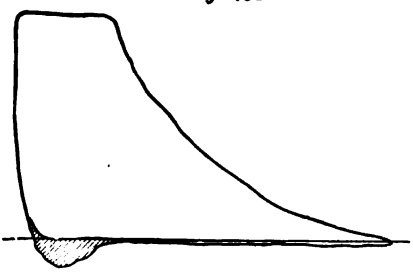

Fig. 193.

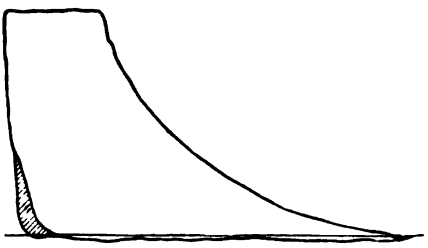

amount of expansion of the air left in the clearance space. So far as the delivery valves are concerned the mechanically-controlled type gives a more equal load on the machine for varying pressures, which is an advantage in a direct steam-driven compressor, but if the pressure in the receiver should exceed the pressure in the cylinder at the time of opening of the delivery valve, then is an unnecessary resistance offered to the machine. It is therefore not unusual to find the mechanically-controlled outlet valve fitted with an arrangement of automatic delivery and an unloading device. In comparing the two types there is also to be considered the complication entailed by a mechanically-controlled valve which, however, is in a measure compensated by the absence of springs.

It has been said that the delivery valves are liable to bang unless they close promptly, and this objection is aggravated if the valves have a large lift. Now the objection to a nest of small valves is that they offer excessive resistance to the fluid, so that if one large valve is adopted it should be carefully designed to avoid the great bang which is so destructive to the valves and seats. The

Riedler valve is a successful attempt to reduce shocks, to provide ample and automatic opening, and to give high speeds with a large valve. The gear is described in a following page, and it is only necessary to state here that in both suction and delivery the opening is automatic. The closing, however, is partly positive and partly automatic. The valve is closed mechanically until it is within about $\frac{1}{16}$ of an inch from its face, when the remaining motion becomes automatic. This method of action, whilst giving a quiet closing, has all the advantages of an automatic valve, and allows of large-size valves and speeds up to 100 revolutions per minute to be employed without objectionable shocks.

The clearance of an air compressor is of great importance, and effects the working of the valves, the output of the compressor, and the working efficiency. The question of cooling is also of great importance, but, except to the extent that it influences the design of valve gear, it is beyond the scope of this work to deal with this subject.

In compound compressors the first or intake cylinder may with advantage be fitted with mechanically-moved valves for both suction and delivery, for in this cylinder a constant delivery pressure into the inter-cooler or intermediate receiver is obtained in spite of fluctuations in the delivery main pressure, and when the valves have been once set they require no further adjustment in the timing of their functions. Fluid friction on the suction stroke of the first cylinder has a considerable effect in reducing the capacity of a machine, whereas in the second cylinder it has little or no effect on the output.

If in entering the cylinder the air passes in thin streams through hot passages or ports, or past hot valves and seats, it will become rarified and reduce the capacity of the machine. The valve gear should therefore be designed to avoid this effect as much as possible.

Having now considered the general principles influencing the action of the valves it remains to illustrate and describe particular types.

India-rubber Valves.—The india-rubber rectangular and circular types of valves have been much used for blowing cylinders where they have proved satisfactory for pressures not exceeding 15 or 20 lbs. per square inch above atmosphere. They are also employed to a large extent for vacuum pumps. The material is not adapted to withstand the high temperatures which obtain with high-pressure compressors, and apart from this consideration the heavy pressures would soon destroy them.

Hinge Valves.—The hinge valve is an excellent type and has been employed for many years with great success. It has the advantage that it can be made of large size, thus giving adequate opening with a small lift, and by careful design the clearance can be made extremely small; also the valve area being large, a very slight difference of pressure is sufficient to open or close it. Referring to the accompanying figure, which shows the arrange-

ment of valves in the end of a horizontal cylinder, it will be seen that the inlet valve occupies the upper half of the cylinder end and the delivery valve the lower portion. The material of the valves is cast steel, and the faces thereof are carefully scraped and bedded on the cylinder cover faces. The valves are hinged on substantial spindles carried in long gun-metal bushes at each end. The spindles move with the valves, and efficient lubrication should be provided

Fig. 194.

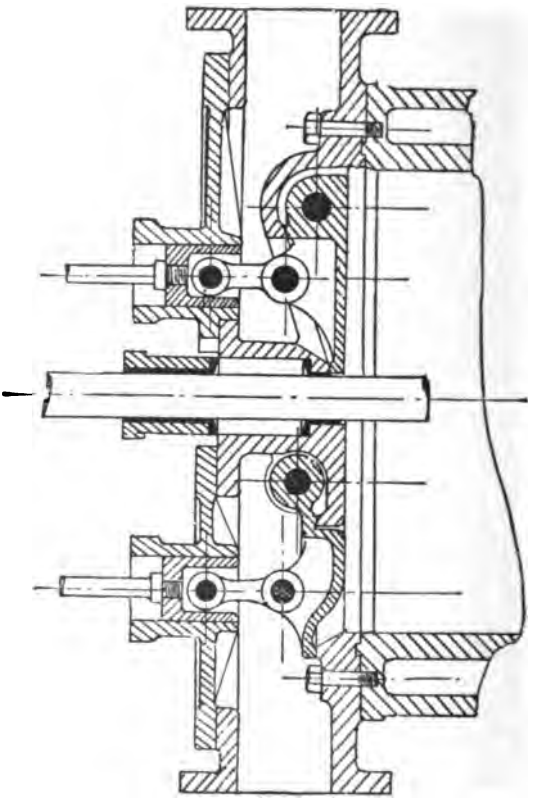

at the bushes. The disadvantage of this valve arrangement is that it prevents thorough jacketting of the cylinder ends, just the place where the cooling water would be most effective.

The valves require to be very carefully controlled or severe banging will result, especially in the case of the outlet valves. Each valve, it will be noticed, is connected by a link to a guide piston, the rod of which is under the control of springs, and rubber buffers. The width of the seat is made ¼ inch for valves

of cylinders 12 inches diameter and under, and up to ¾ inch wide for valves on 60-inch cylinders. It will be seen that the air inlet is enclosed, the advantage of which is that the compressor inhales a cool breath of air from the open instead of taking in the warm rarified atmosphere of the engine-room. This increases the capacity of a compressor to an appreciable extent.

The Coiled Valve.—The latest form of valve used by Messrs. Fraser & Chalmers is of the automatic type. It consists of a coiled plate carried on a hinge spindle as shown in Fig. 195. This type

Fig. 195.

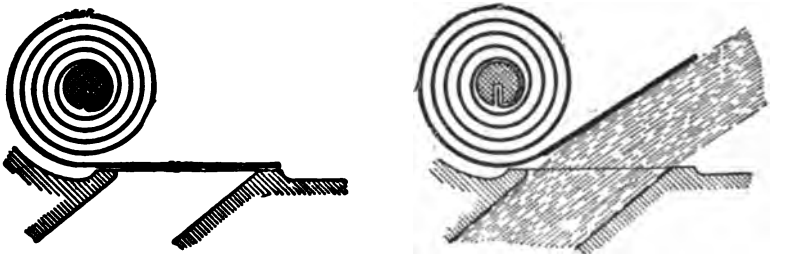

of valve is suitable for either water pumps or air or gas compressors. Fig. 196 shows the application to an air compressor.

Fig. 196.

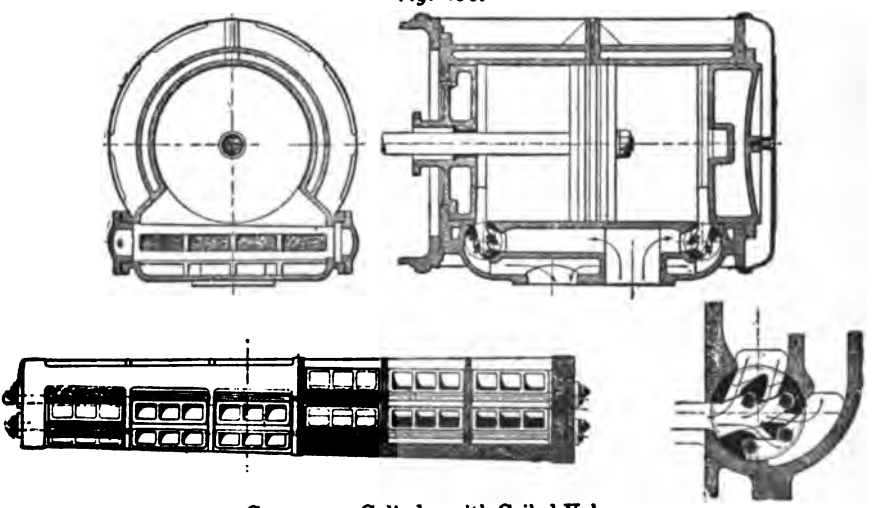

Compressor Cylinder with Coiled Valves.

Both inlet and outlet valves are carried in a conical turned plug at the end of the cylinder. This forms a very good arrangement; the plugs are easily withdrawn for inspection, and the valves are

quiet and prompt in action; the wear is small, and the renewal of a valve is a simple matter.

When used on blowing cylinders the valves are arranged in a circle round the end of the cylinder as shown in Figs. 197 and

Fig. 197.

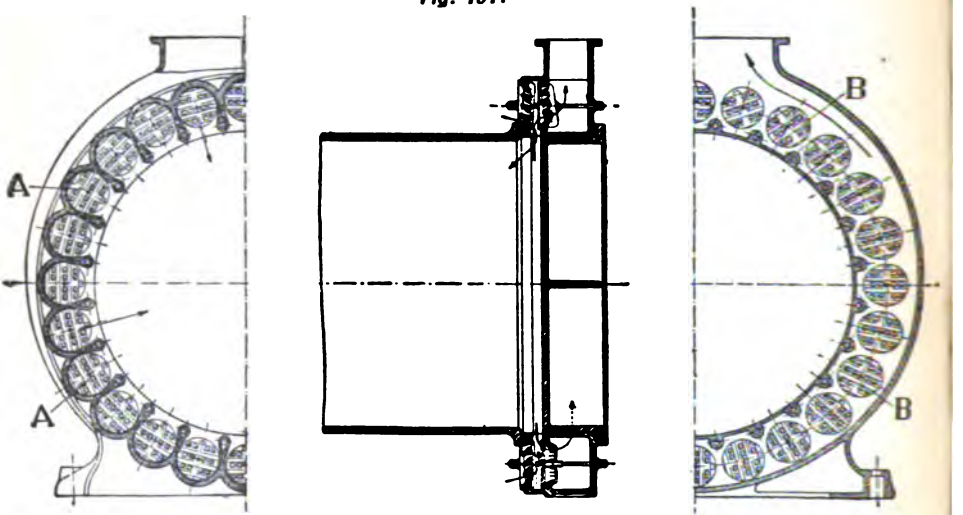

Blowing Cylinder with Coiled Valves.

Fig. 198.

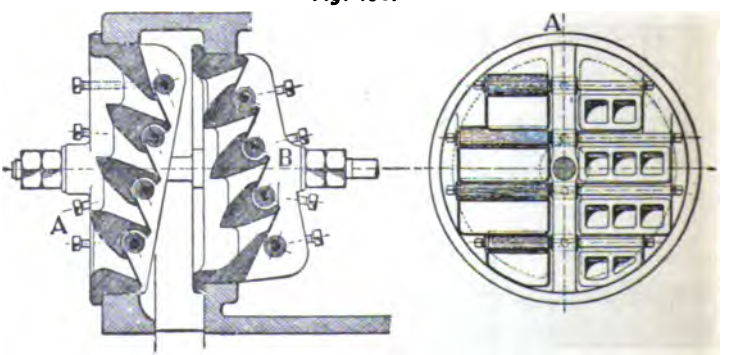

Enlarged View of Valve.

198. The object is to obtain a large valve area, and although the delivery valves are not so accessible as in the previous example, and the clearance is greater, these points are wisely sacrificed for a large valve area; because the clearance of a low-pressure compressor has not the same effect on the capacity and efficiency

as occurs with higher pressures; and where the pressure is low it is not often that the valves require inspection.

Mushroom Valve.—The next illustration shows the mushroom type of valve. Valves of this type are not usually made more than 4 or 5 inches in diameter and are arranged in groups, the number in the group varying with the size of the compression cylinder. The springs may be designed to give a closing pressure of ½ lb. per square inch of valve area. The springs should not be too short or they will offer too much resistance to the valve opening the proper extent, and wiredrawing or throttling will result. When vertical the weight of the valve must be allowed for when calculating the strength of the springs.

Considerations of durability would point to the necessity of making the valve seats wide, but in the case of delivery valves, wide valve seats render the action of the valves jerky and reduce

Fig. 199.

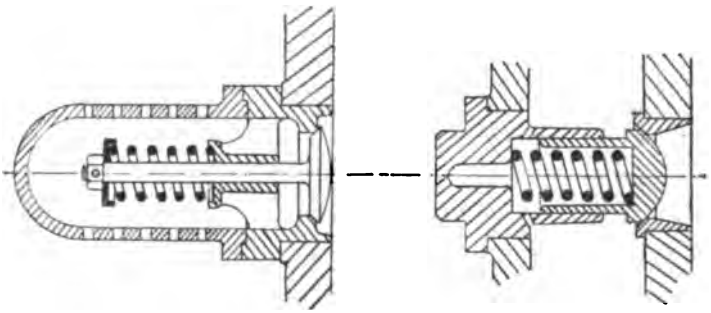

the efficiency of the compressor. To illustrate these points take the case of a delivery valve having a diameter of 3 inches across the inside of the seat and 3⅜ inches on the outside. Suppose the pressure in the receiver to be 80 lbs. per square inch. The pressure of air on the delivery side will be equal to the area of 3⅜ inches diameter × by 80 lbs. = 716 lbs. The area of a circle 3 inches in diameter is 7·07 inches, and therefore before the valve will open the pressure in the cylinder must be equal to $\frac{716}{7{\cdot}07}$ = 101 lbs., or an increase of 25 per cent. The effect is identical with that of a positively controlled delivery valve working at a pressure for which it has not been adjusted. The effect of this increase is nearly always seen in the diagram at the commencement of the delivery line, and in actual work the valves open with a violence which is harmful to the springs and gear. Reverting to the figure, the suction valve is shown at the left hand and it will be seen that the spring is enclosed in a perforated hood of brass. The seating is held in the cylinder by an oval flange cast thereon, and also carries a guide for the spindle and a recess for the spring.

Riedler Valve.—The Riedler air compressor valves are interesting examples of a design which gives automatic opening both on the suction and delivery, but the closing is assisted by mechanical means. Figs. 200 to 202 show the valves in detail, whilst Fig. 203

Fig. 200.

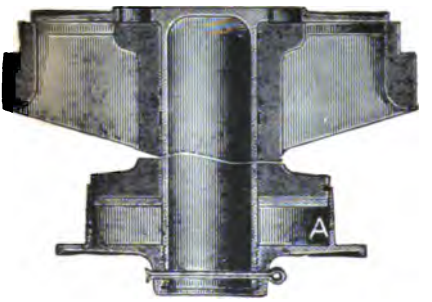

Fig. 201.

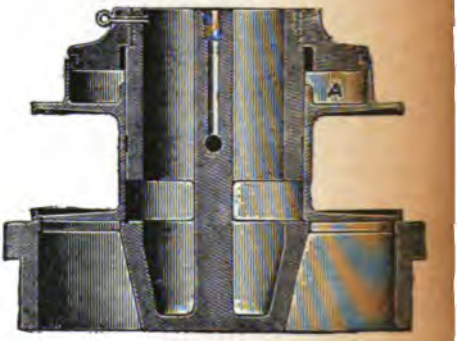

shows the arrangement of the valves in the cylinder end. It will be noticed that there is only one suction valve and one delivery valve for each end of the cylinder, and that these valves give an opening both on the inside and outside edge of the seat, for the air

Fig. 202.

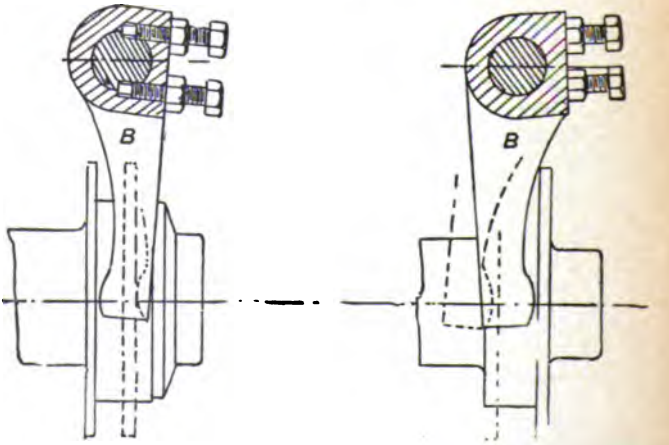

passage, and both suction and delivery valves are provided with dashpots A. The tappets B (Fig. 202) are mounted on a horizontal spindle which receives motion from a cam on the wrist-plate of the steam cylinder, and these tappets are adjusted so that when the

PLATE X.

Fig. 204.

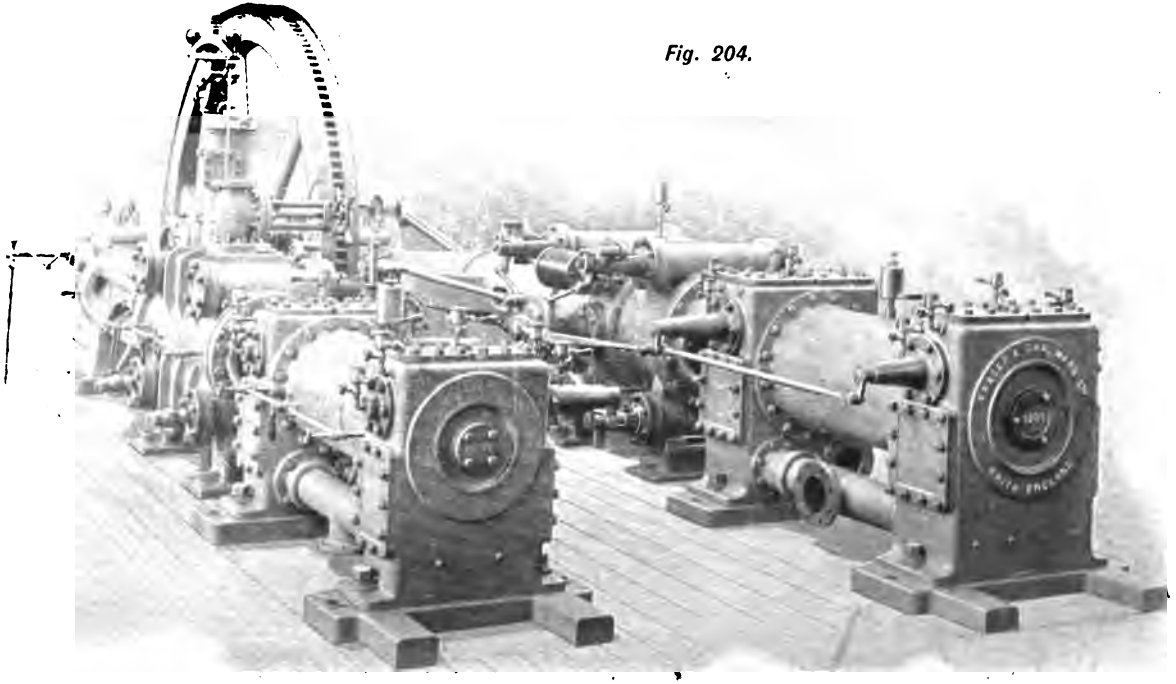

Fraser & Chalmers' Riedler Compressor.

valves are closed and resting on their seats there is about $\frac{1}{16}$ inch clearance between the tappet and the valve. By the action of the cam on the wrist-plate the tappets are clear from valves when the opening period arrives, and the valves are thus free to open automatically, but as the closing time approaches the tappets carry them to within $\frac{1}{16}$ inch from their closed position and leave the remaining portion of movement to be performed by the air, thereby securing the advantage of an automatic valve without any serious banging or slamming. It would, of course, be impossible to adjust the tappets to such a nicety as to close the valves completely without straining the gear, unless springs and other complications were introduced, hence the $\frac{1}{16}$ inch clearance is also necessary for mechanical reasons. The fact that both suction and delivery valves should close exactly at dead point, renders the external gear very simple; one rod from the cam on the wrist-plate is sufficient to control the four sets of tappets, and both suction and delivery tappets are carried on one spindle at each end of the air cylinder. The external appearance of the Riedler air compressor as made

Fig. 203.

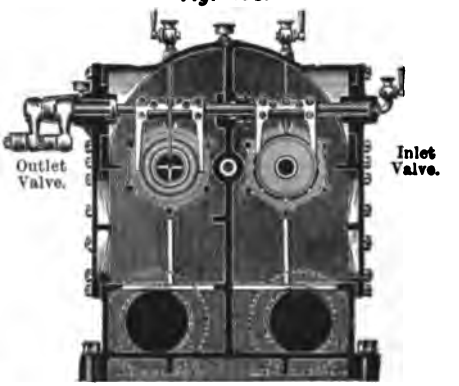

Fig. 205.

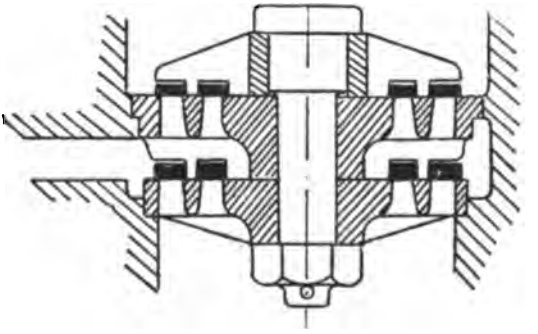

by Messrs. Fraser & Chalmers, Limited, is well shown in the accompanying engraving, which, together with the foregoing details, will render the action clear.

Ring Valve.—The ring valve is shown in Fig. 205. The upper is the delivery and the lower the suction valve. The rings are

made of gun-metal and are carefully scraped to an air-tight fit on the gun-metal seats. Each ring is guided by four ribs which also limit the lift. This type is suitable for higher speeds than most automatic valves. The rings work best vertically, and the lift should not exceed $\frac{3}{32}$ inch, otherwise the compressor will make false strokes when the speed exceeds 200 per minute, due to the valves failing to seat. The writer has tested a compressor with this type of valve and a speed of 150 revolutions of the crank shaft was attained with only 2 per cent. of false strokes.

Fig. 206.

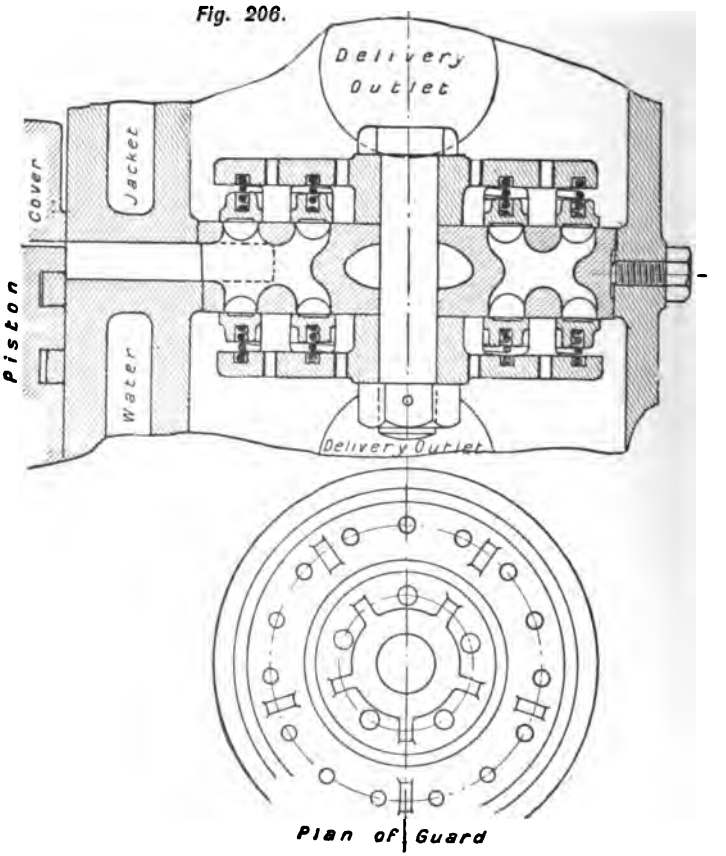

When higher speeds are desired, this type of valve should be spring-loaded, as shown by Fig. 206. In this figure two outlet valves are shown working on each side of one seat, the springs rendering the closing of the lower rings quite satisfactory. There is no objection to this design on the delivery valve, but on the

suction valve a spring prevents the free flow of air into the cylinder, and greatly reduces the output of the machine. Some modern high-speed compressors are, therefore, provided with a piston inlet valve and spring-loaded outlet valves of the type shown by the accompanying figure.

Ingersoll-Sergeant Compressor.—The well-known Ingersoll-Sergeant piston inlet compressor is shown in section by Fig. 207. The annular steel inlet or suction valves are carried in a groove in the piston, and their opening and closing are assisted by the movement of the piston. Considering one side

Fig. 207.

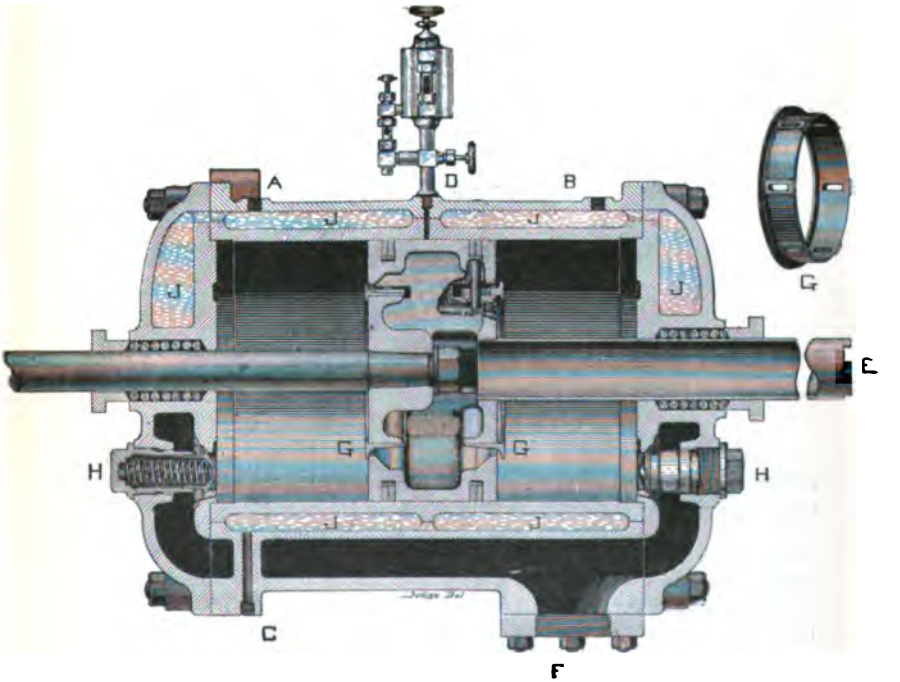

of the piston, and assuming it to be at the end of the stroke, the reversal of the piston will tend to leave the valve behind it, thus giving easy passage to the entering air. Towards the end of the next stroke, however, the valve will outrun the piston and will thus be assisted in closing by its inertia. The movement or lift of the valve is slight, not exceeding about $\frac{1}{4}$ inch, and the wear is insignificant. The arrangement, however, does not render the valves very accessible, and their renewal or inspection is a troublesome operation. The valves, however, are made of high-class,

weldless mild steel and are practically indestructible; there are no springs, and therefore frequent inspection is unnecessary.

Slide Valves.—For low pressures a slide valve is sometimes employed, and the air cylinder is made with ports like the cylinder of a steam engine, but the valve functions differ considerably from those of a steam engine valve. Referring to Fig. 208 the suction inlet is at A which would be the exhaust port of a steam engine. The suction edge of the valve must open after the crank has passed the dead centre, and the exact point at which opening should take place depends on the clearance volume and the final pressure. The inlet edge should open exactly at the instant the air remaining in the clearance space from the previous discharge has expanded down to atmospheric pressure. If the valve opens

Fig. 208.

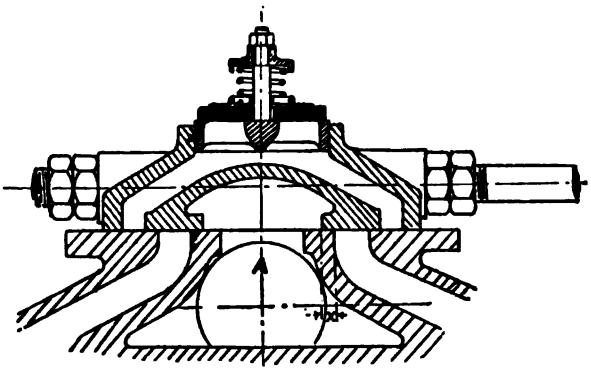

before this, compressed air will be lost through the suction port; on the other hand, should the opening to suction be delayed there will be a partial vacuum formed in the cylinder with consequent loss. This has already been explained on a previous page. In the accompanying valve diagram, Fig. 209, let A B represent the crank position when the suction valve should open, and let the throw of the eccentric be equal to distance A B. Bisect angle B A H by line A G, and produce A G to A F. Then A F represents the throw and position of the eccentric relative to the actual position of the crank A B, and distance J F = the suction lap corresponding to the dimensions X in the previous illustration. The suction will open at A B and close at the end of the stroke A H. This action is quite satisfactory so far as the suction functions are concerned. It remains to deal with the delivery.

Suppose the receiver pressure to be 25 lbs. and that, taking the clearance into account, the crank position at delivery point is A K. Now, with the eccentric position already found, it is impossible to design the delivery edge of the valve so that it will open at A K and close again at A D. But by placing a non-return valve on the

slide valve, as shown, the period of opening for the delivery valve ceases to be of vital importance, and, provided the port is closed exactly at dead point, no serious losses will occur. By making the suction or delivery laps equal this effect is ensured, and although the opening by the slide valve is long before the pressure in the cylinder has reached the delivery pressure, the non-return valve prevents reflux of air from the delivery box, but does not prevent the air in the cavity of the valve re-expanding in the cylinder. The capacity of this cavity should therefore be as small as will allow the free passage of the discharge from the cylinder.

Slide valve compressors are only suitable for low pressures, and this type entails large clearances. They form interesting examples, however, and illustrate the points to be observed when designing the valve gear of mechanically-controlled air compressors.

Fig. 209.

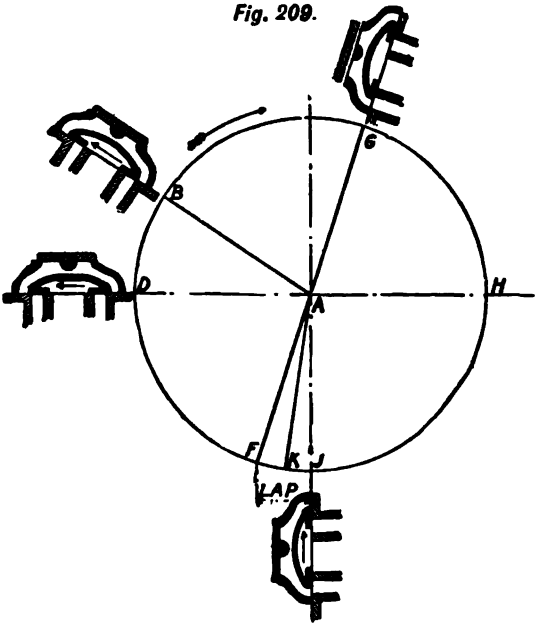

Corliss Valves.—The Corliss valve is often used for air compressors, particularly by American engineers. When well designed it is a good type and gives small clearance and easy fluid passage. The usual arrangement is to have Corliss suction valves, but poppet or mushroom valves for the delivery. The suction valves are usually operated by an eccentric working a wrist-plate or its equivalent, and the wrist-plate pins arranged to give a rapid opening and a small dwelling angle. Sometimes the delivery valves are positively controlled, so far as closing is concerned, but the opening is automatic and occurs when the pressure in the cylinder

slightly exceeds the receiver pressure. This allows of one wrist-plate and eccentric being used for both suction and delivery valves, but where both suction and delivery valves are positively controlled both in opening and closing two eccentrics are necessary.

The position of the eccentric in relation to the crank depends on the air pressure and clearance, and also on the position of the valve levers. The valve must open to suction the instant the air in the clearance space has expanded down to the atmospheric pressure, and the eccentric will lead or follow the crank as the valve lever is up or down. To render this matter clear consider the valve arrangement shown in Fig. 210. When the crank is in the position shown the suction valve is ready to open, and the valve is edge and edge with the port in the cylinder. With the valve arrangement here shown the valve must open in the direction of the arrow, and to give this action it is clear that the eccentric must lead the crank. Had the suction levers been arranged in a vertical position it is evident that the position of the eccentric would be directly opposite to this position. The exact angle of the eccentric may be found by the construction shown in Fig. 189, but in order to determine the proper lap of the valve it is necessary to trace the amount from the eccentric circle to the valve circumference. Suppose the throw of the eccentric is known, and also its angle in relation to the crank, the amount of lap referred to the eccentric circle would be found as explained in the slide valve diagram (Fig. 210). From this point it can be traced to the main wrist-plate pin, and from thence to the valve lever pins on the wrist-plate; the amount referred to these points being proportional to their distance

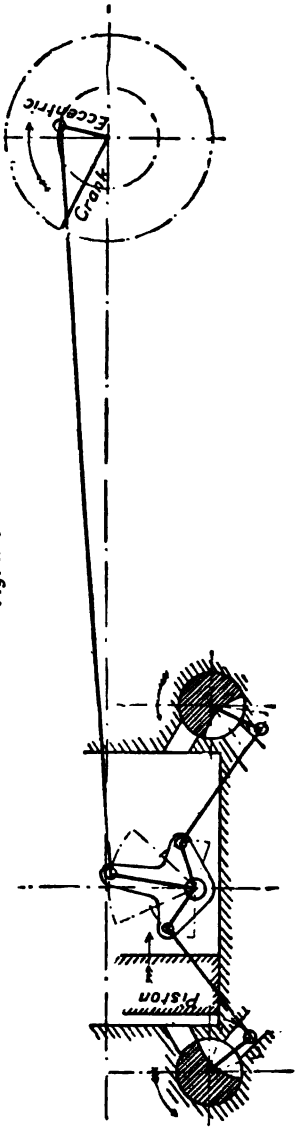

Fig. 210.

from the centre pin of the wrist-plate. From these points it may be transferred to the arc described by the valve lever pins, and finally to the valve circumference.

Fig. 211 is a section through the cylinder of a Corliss valve compressor with positive inlet and outlet valves. All valves are worked from one eccentric, but as it is impossible to obtain the proper time of both opening and closing of the delivery valve with an eccentric set in a suitable position for the suction valve, the delivery valves are provided with a series of automatic clacks which open at the required instant. The closing action is positive, because, when the Corliss valves are open, the automatic valves being in equilibrium, as far as air pressure is concerned, close by

Fig. 211.

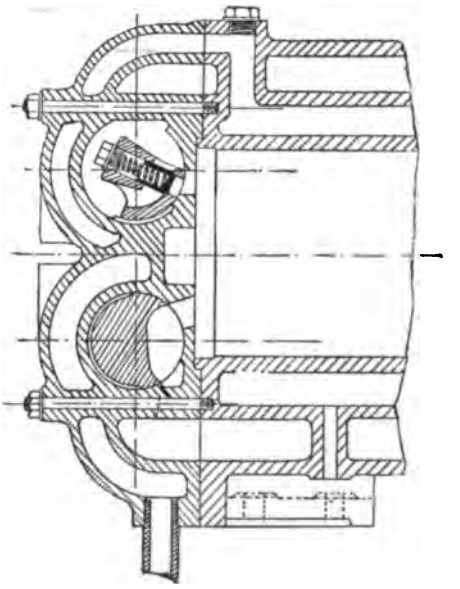

reason of the springs. The time of closing of the delivery valve is, of course, precisely at the end of the stroke, and therefore this action can be accomplished by an eccentric which is common to both suction and delivery valves. The present design, which is taken from recent American practice, provides for a thorough jacketting of the covers as well as the body of the cylinder. Another common design met with in American practice is to have Corliss suction valves, but a nest of poppet valves for the delivery. This is a good arrangement, since it provides a free suction with comparatively simple valve gearing, and as the necessary area through the delivery valves is much less than the area of the suction inlet, the poppet

valves may be kept small and consequently free from serious banging or slamming.

Köster Valve Gear.—The valve gear illustrated by Fig. 212 possesses some interesting features, and is well worth a careful study. The objects sought are a free suction, an easy delivery, quiet closing of the delivery valve, and thorough jacketting of the cylinder covers as well as the barrel. The suction is controlled by the piston valves A, which are driven from the crank like the piston valve of a steam engine. In the illustration the piston valves are shown near the extreme position to the right. Air is entering the back end of the cylinder from the suction chamber S through the port C, sequacious of the piston D. Concurrently

Fig. 212.

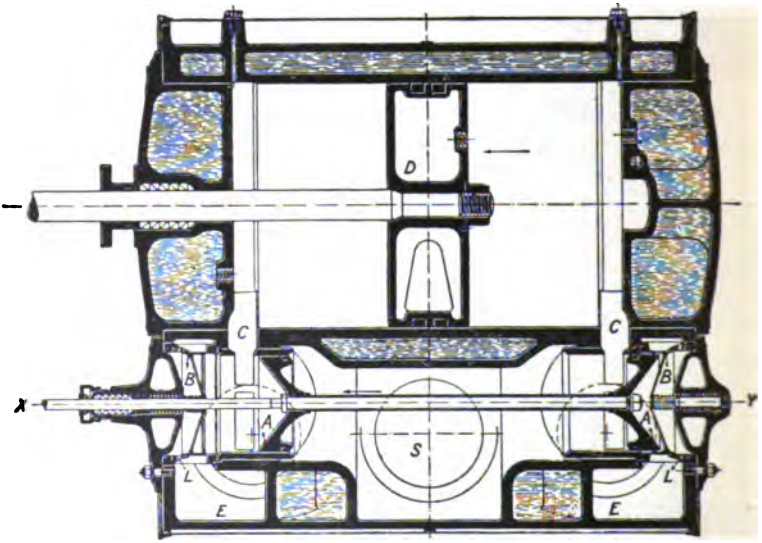

with this action, the air on the opposite side of D is being compressed, and when its pressure slightly exceeds the receiver pressure it will be pushed through the large circular automatic delivery valve B into the chamber E. The special feature of this valve gear is that, although the delivery opening is automatic, the closing is performed by the piston valve exactly at the end of the compressor piston's stroke. This action places the delivery valve in equilibrium so far as the air pressure is concerned, and its closure is effected by the light spiral spring shown. Now, as long as this valve closes before the piston valve has again uncovered the port, the action will be quite satisfactory, since the valve A prevents the air expanding back into the cylinder. It will be seen, therefore, that there is no banging action on the delivery valves, since they have

a period in which to seat themselves that embraces half a revolution of the machine. As a result of this condition, their lift may be considerably greater than would otherwise be practicable. This reduces the diameter of the valve, and the area of the valve seat.

Coming now to the geometry of the gear, it is evident that the time of opening for the suction valve is shortly after the piston has commenced the suction stroke—that is, the instant at which the air in clearance spaces has expanded to the pressure in the suction chamber. The time of closing is, of course, exactly at the end of the stroke. This matter has already been dealt with on a previous page. In a compressor without clearance the opening and closing would both be at the end of the stroke, and this action would be accomplished by a piston valve without lap, and driven by an eccentric at right angles to the crank.

In Fig. 213, let A B represent the crank position when the

Fig. 213.

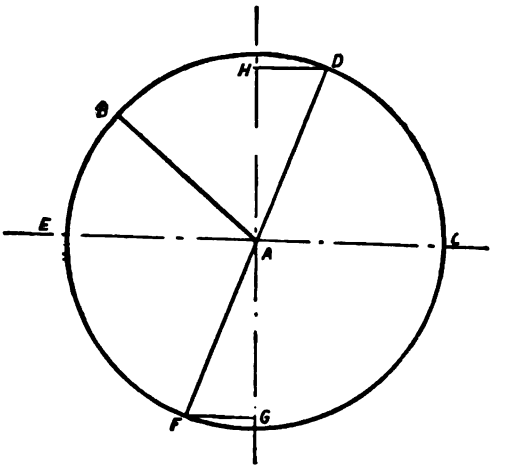

suction should open; and A C the closing point. Also, let the distance A B = half the travel of the piston valve. Bisect angle B A C by line A D, and produce A D to F. Then A D or A F represents the position of the eccentric in relation to crank position A B, and the lap on each side of the port = H D = F G. Whether the eccentric be placed at A D or A F depends upon the presence of rocking levers, &c. When the piston is in its extreme position the piston valve must cover the port by the amount of lap as found above, and be moving in the opening direction, so as to uncover the port at the right point; hence when the piston valve is directly driven the eccentric will *follow* the crank.

This compressor lends itself very conveniently to a two-stage

arrangement driven by a trunk of two diameters, and the illustration (Fig. 214) shows a section through the valve chambers of a

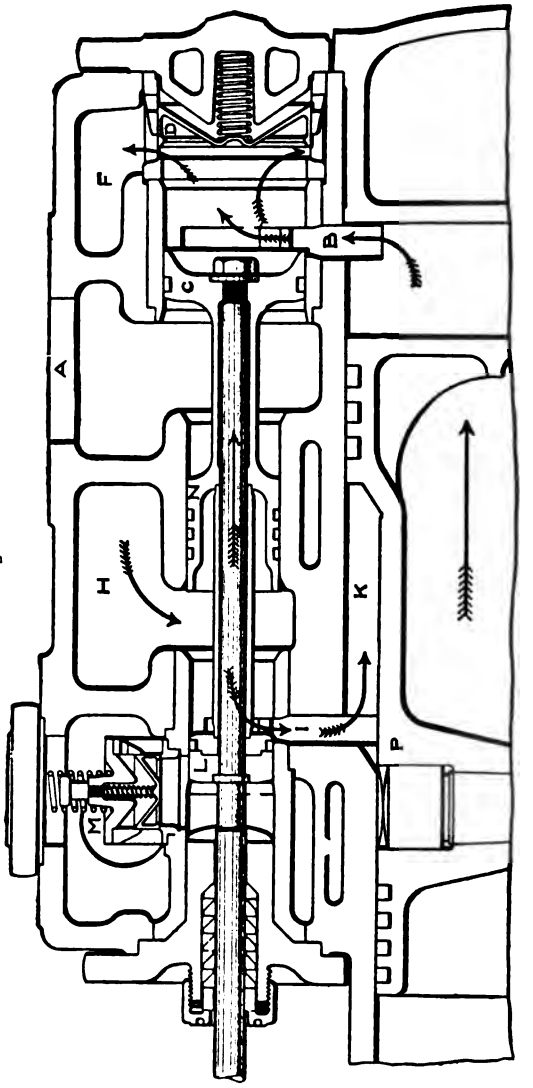

Fig. 214.

belt-driven machine. The arrows indicate the direction of the flow of the air and the movement of the valves and piston.

This gear is made by Messrs. W. H. Bailey & Co., Ltd., Salford,

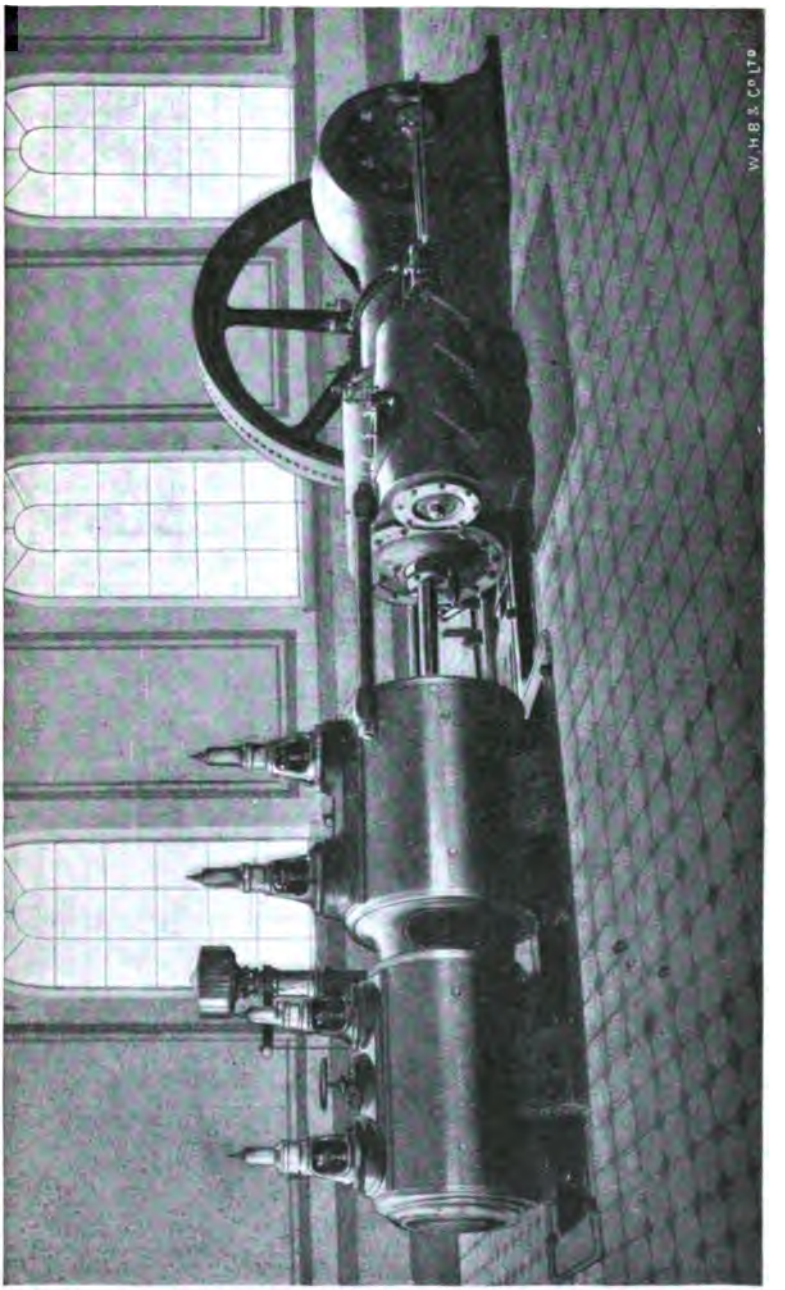

Fig. 215.

Fig. 216.

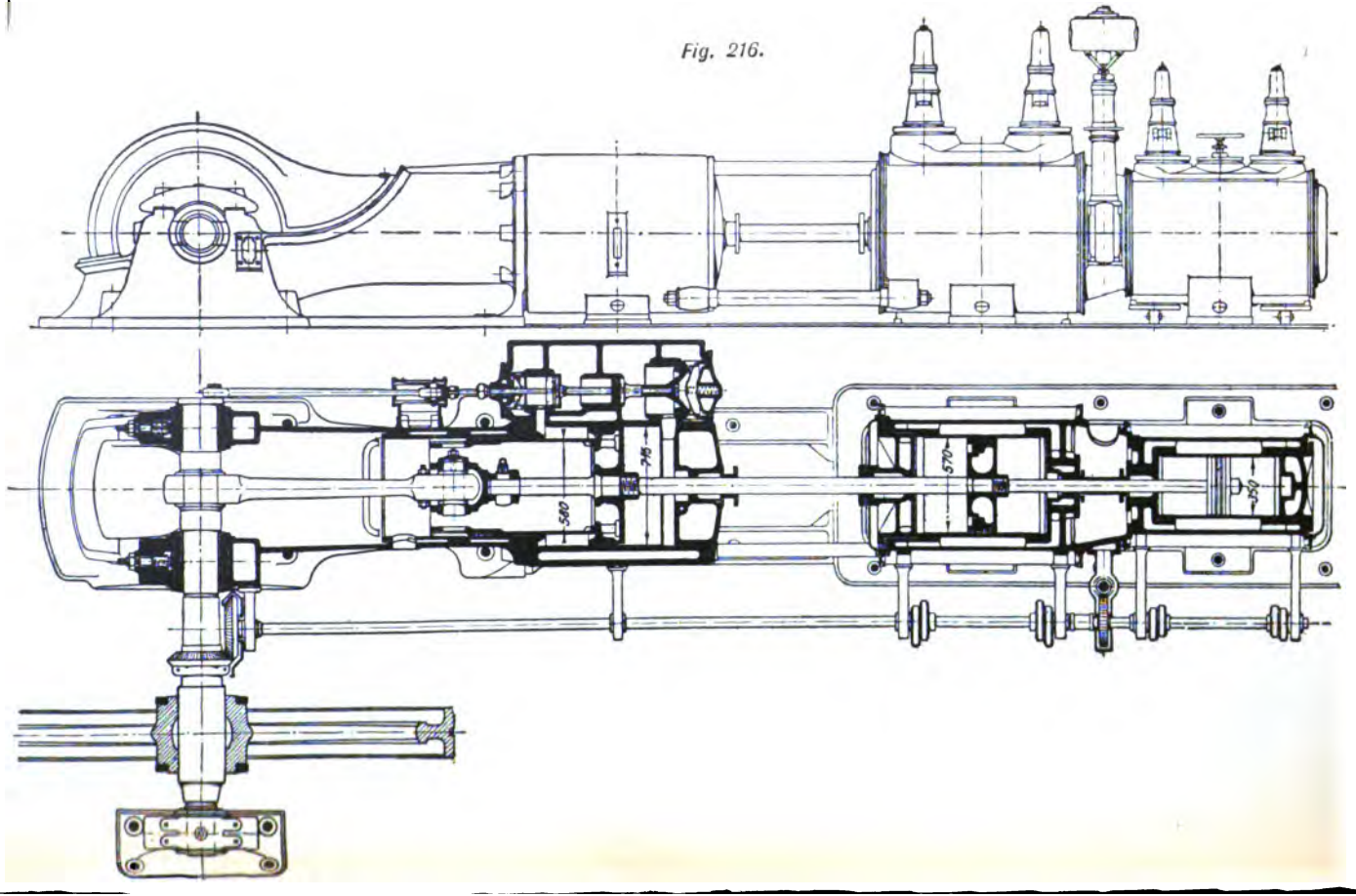

under the Köster patents. The external appearance of the compressor is well shown by the accompanying illustration of a single-acting two-stage machine driven by tandem steam cylinders, and Fig. 216 is a drawing of the same engine.

Unloading Devices.—It has been mentioned on a previous page that positive valve compressors are best adapted for working at a constant pressure, and with this type an unloading device becomes an important adjunct. It also prevents waste of power by automatically cutting out the compression when the maximum air pressure is reached, thus preventing the compressor blowing out the air through the safety valve on the receiver. There are several methods of unloading. One good method is to hold open the suction valve, which will relieve the compressor of all load except that necessary to draw in and expel the air through the open valve. Another plan is to hold the delivery valves open. This admits air at receiver pressure to both sides of the piston, which is thus put in equilibrium and relieved of load. In steam-driven compressors, when the load is thus thrown off, reliable means must be provided to prevent the machine racing, but the speed must not be reduced to such an extent as to allow the machine to stick on dead centre.

Fig. 217.

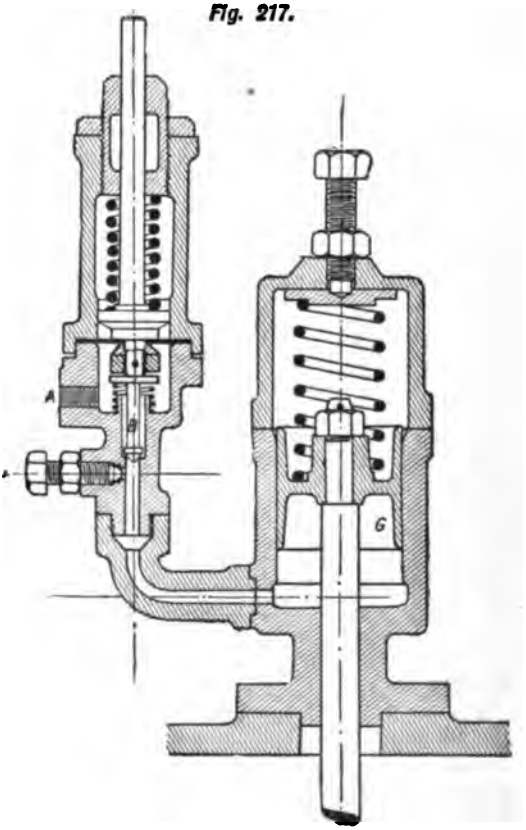

The easing gear shown in Fig. 217 is suitable for belt or gear-driven compressors with automatic valves. The hole A is connected to the delivery pipe of the compressor, and when the pressure exceeds the desired point the spring-loaded diaphragm

lifts and allows the small spring to open the pin valve B. This admits air to the underside of piston G, which is connected to the suction valve of the machine. The lifting of G keeps the suction valve wide open on both forward and backward strokes, and the air is simply churned to and fro. The object of the valve F is to allow the piston G to fall after the pin valve has closed. F is regulated so that when B is open air cannot escape as quickly as it enters through the pin valve, and pressure, therefore, accumulates under G. After B has closed, however, the escape continues through F, and allows G to descend, and the compressor to commence work. By arranging a bye-pass from the pipe connected to A to the cylinder in which the piston G moves, the suction valve may be lifted at starting, thus enabling the machine to start without load. When full speed has been attained this bye-pass can be closed, and the compressor will assume its working cycle.

In the case of steam-driven compressors supplying air for rock drills an air governor is often applied in connection with the usual speed governor. The air pressure controls the speed of the machine so as to maintain a fairly constant receiver pressure, and at the same time the speed governor prevents racing. It is also advisable to provide means of preventing the compressor stopping by the action of the air governor.

Fraser & Chalmers' Air Governor.—The air governor made by Messrs. Fraser & Chalmers fulfils the above conditions, and its action will be understood from the illustrations and description here given. It is specially designed for compressors supplying air to rock drills. The bottom of the dashpot chamber K (Fig. 218) is in communication with the air receiver and acts upon the underside of the plunger Q, against the tension of the adjustable helical spring. The plunger is connected by linkwork to the dashpot H. The chambers are filled with oil from a supply pipe W, which acts as a resistance to the dashpot plunger H, and gives a steady action to the governor. The connection between the plunger Q and the governor trip levers will be traced from Fig. 219, and also by Fig. 220.

The total lift of the governor sleeve, which is 3 inches, may be divided into three distinct periods as follows:—

First Period.—During the first $\frac{3}{8}$ inch of the sleeve's lift the governor has to work against the dead weight of the springs and spring-box, &c., only no spring compression takes place during this period, and the range of the speed of the engine is from zero to, say, 20 revolutions per minute.

Second Period.—During this period, which embraces a sleeve lift of $1\frac{5}{8}$ inches—that is, until it is $\frac{1}{2}$ inch above its central position—the lower spring is being compressed and the speed of the engine increases from 20 to 50 revolutions per minute.

Third Period.—When the sleeve is $\frac{1}{2}$ inch above its central position the internal shoulder of the lower spring box comes in

contact with the shoulder on the upper spring sleeve, and during the last inch (or third period) of the sleeve's lift the upper spring is being compressed, and the engine speed increases from 50 to 80 revolutions per minute. The advantage gained by having the first period of the sleeve lift is in preventing the nuisance of the engine continually stopping when only a small quantity of air is required by the drills. To obtain this advantage to the full

Fig. 218.

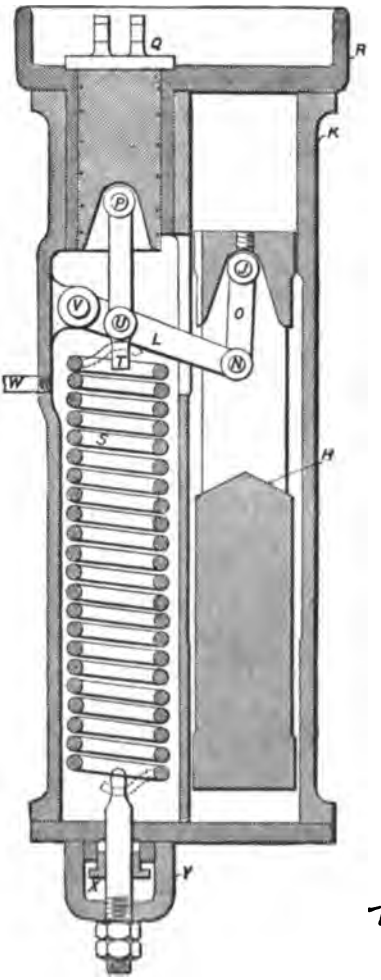

Fig. 219.

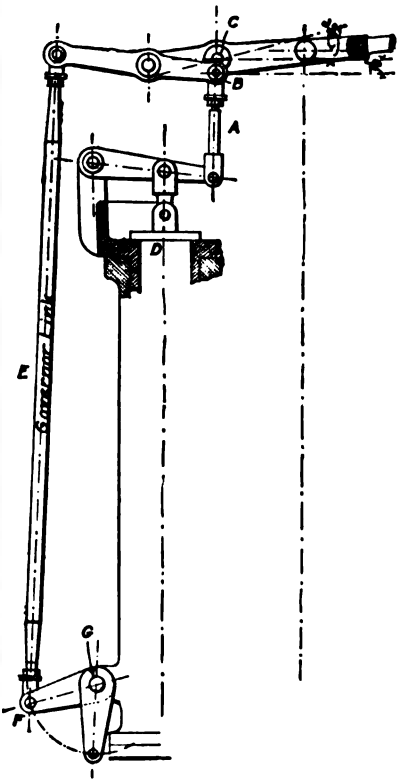

the following two conditions are essential :—(1) The tension spring in the air governor (see Fig. 220) should be adjusted so that the air plunger commences to rise exactly at the pressure at which it is desired to work; (2) the relief valve on the air receiver should

be set to blow off at 8 lbs. above this working pressure. Now, supposing all the work is shut off, the engine will continue to run at a speed which will gradually decrease as the air pressure rises. Supposing the speed to decrease until the governor sleeve is just at the top of its first period of lift the engine should now be running at about 20 revolutions per minute, and the small amount of air being compressed will be blown through the relief

Fig. 220.

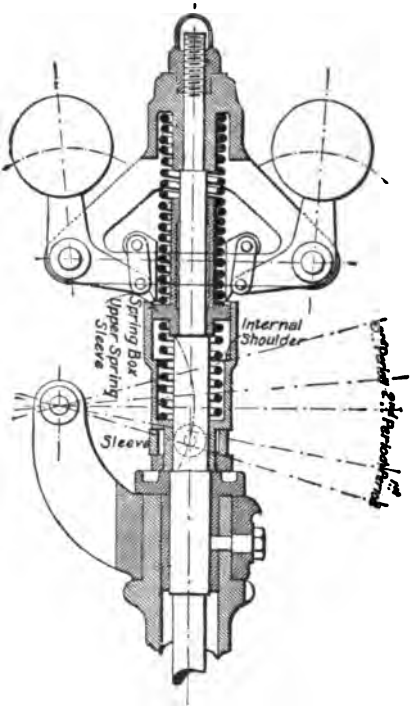

valve. The engine will be prevented from stopping by the fact that if it slows down below 18 revolutions per minute the governor sleeve will quickly drop $\frac{3}{8}$ inch, and thus considerably increase the cut-off. Another advantage is that when the governor sleeve is at the top of its second period of lift a further increase of 10 revolutions per minute in the speed of the engine will bring the sleeve to the top of its lift, thus cutting off steam at zero and preventing the engine from racing.

PART IV.

PUMP VALVES.

CONTENTS.—General Remarks—The Common Clack Valve—Velocity of Water—High-suction Lifts—Lift of Valves—Arrangement of Valves—Spring-loaded Valves—Double-beat Valves—Multiple-ported Valve—Shocks—High-pressure Hydraulic Valves—Flexible Valves—Disposition of Valves—Valve Grids—Dermatine Valves—Leather Valves—Reflux Valves—Haste Valve.

General Remarks.—An automatic valve is one that is opened by the fluid which passes through it. Such a valve controlled by a fluid subjected to a pumping action should open with little resistance, it should close rapidly, and should afford sufficient area of opening for the easy passage of the fluid. Unfortunately, the qualities which conduce to easy opening are antagonistic to rapid closing, and most designs are a compromise between these two considerations. The direction of the motion of the fluid should not be greatly altered when passing through the valve, and there should be no sharp corners or flat surfaces on which the fluid may churn or impinge.

The Common Clack Valve.—Various forms of the common clack valve are illustrated in Figs. 221 to 225. The angle of the seat is usually 45°, and the width of the face depends on the pressure and the size of the valve. The narrower the seat the more easily is the valve made tight. On the other hand, a seat that is too narrow will not stand the pressure and the hammering action. For pressures up to 400 lbs. per square inch the width of the seat measured in a horizontal or vertical line may be $\frac{1}{16}$ inch for valves from $\frac{1}{4}$ to $1\frac{1}{2}$ inches diameter, increasing proportionally to $\frac{1}{4}$ inch for valves of 5 inches diameter, which is about the limit for valves of this type. The taper of the seat in the valve casing is usually 1 in 16 on the diameter. Referring to the illustrations, Fig. 221 shows a common form of clack, which is guided in its seat by three wings, and the lift controlled by a set screw. In Fig. 222 the valve is of an improved shape for the easy passage of water. In both types the wings should be feathered as shown to reduce fluid friction. Valves of this type are said to be fully open when the lift is one-fourth the inside diameter of the seat. This would be true if there were no wings; but in making calculations for the

area of passages through the valve allowance should always be

Fig. 221.

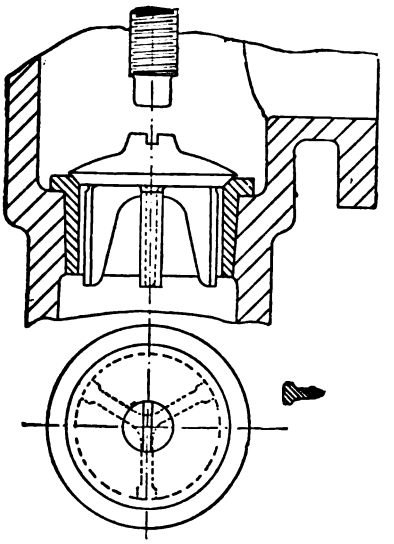

Fig. 222.

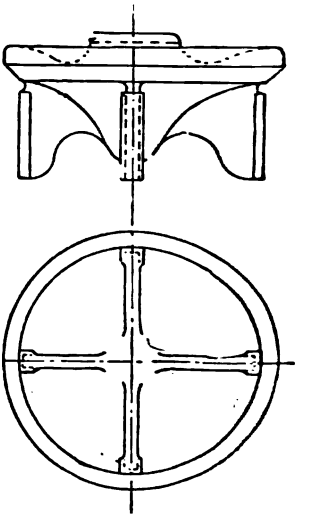

made for the wings which diminish the area of passage some 15 per cent. of the full area through the seat. The next figure illustrates a clack valve with slanting wings which give a twisting movement at each pulsation. This action gives a more uniform wear on the seats and prevents grooving. The type shown by Fig. 224 is guided by a central spindle fitting into a bored hole in the central boss of the seat. This design is inferior to the wing type. The boss, spindle, and wings ob-

Fig. 224.

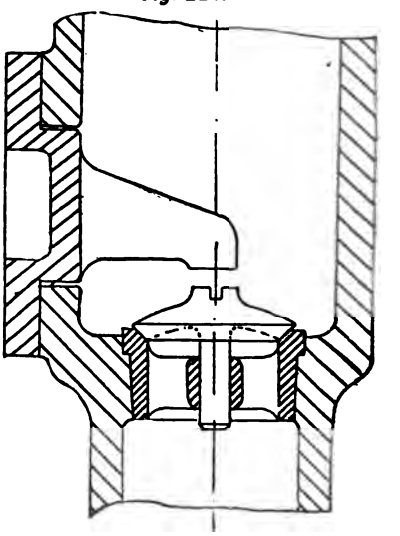

Fig. 223.

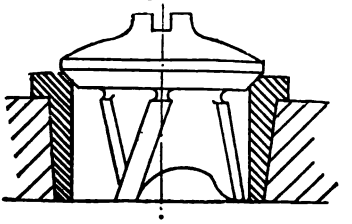

struct a larger percentage of passage than the wings, and the machine work on the valve and seat is greater. The ball clack is shown by Fig. 225. This forms a very satisfactory type, and considering the cheapness of brass and steel balls it is somewhat strange that it is not more widely adopted.

Fig. 225.

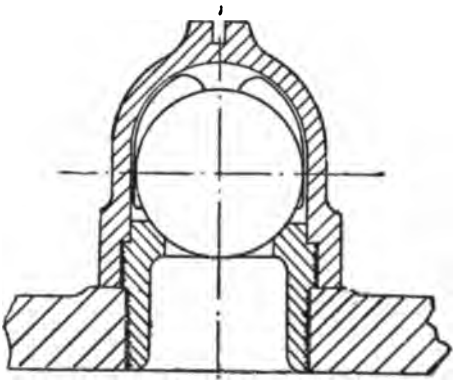

Velocity of Water.—With respect to the best velocity of water through the valves it may be said that the lower the speed, the better. A low speed entails large valves; but large valves increase the price of pumps to a greater extent than would be expected on first reflection. Apart from the extra weight of brass in the valve and seat, and the machining thereof, the valve chamber is proportionally increased, as well as the size of the hand hole covers for access to the valves. It is therefore necessary when deciding this matter to have regard to the class of pump for which the valve is intended. A cheap commercial pump for low lifts may have a calculated maximum water velocity of 12 feet per second through the valves, whilst many high duty pumps of large size have a maximum water velocity through the valves not exceeding 2 feet per second.

High-suction Lifts.—When the suction lift is high special attention is necessary in designing the suction valves and passages, or there will be a probability of the pump failing to obtain a full intake of water. It is well known that the velocity with which water will flow under a given head is shown by the expression $8\sqrt{h}$. Now if the suction of the pump were only equivalent to a difference of, say, $\frac{1}{2}$ lb. above the pressure corresponding to the height of the suction lift, reckoning in resistance of valves and friction in pipe, the water could only flow into the pump chamber at a velocity of $8\sqrt{\frac{0{\cdot}5}{0{\cdot}434}} = 8{\cdot}584$ feet per second; and the passages and valve areas would require to be large enough to pass

the water at a speed something less than the above, as a maximum, or the pump would fail to deliver the full volume.

Lift of Valves.—Another matter that is largely decided by commercial considerations is whether a large valve or series of valves having a small lift should be employed, or a small valve or series of valves having the maximum lift of about one-fourth the diameter. Putting aside questions of cost a small lift is most desirable, and for high speeds and pressures is essential for efficient working. It is impossible to lay down hard and fast rules for the lift of valves under various conditions, but the following table may be useful as showing the average state of things met with in actual successful work :—

Diameter of Valve in Inches.	Pressure in Lbs. per Square Inch.	Beats per Minute.	Lift in Inches.
1½	200	60	$\frac{5}{16}$
2	100	75	¼
2	40	25	½
3	60	40	½
3	150	50	⅝
3½	20	100	$\frac{9}{16}$
4	50	40	¾
4½	80	30	1

It is advisable to provide adjustment to the lift of pump valves, and this is conveniently obtained by a screw through the cover of the valve chamber, as in Fig. 221. The lift can then be regulated to give the best working result, a matter that can only be ascertained by actual trial.

The speed at which valves will work depends on their weight per unit of area. The heavier the valve the quicker it will seat, but at the same time it will offer increased resistance to the water. Sometimes springs are used to assist rapid closing, and in their case the valve itself should be as light as is consistent with strength. A spring, however, is harmful in preventing a free opening on the suction stroke, the effect of which is noticed on a succeeding page. The ideal valves for a quick-running pump would open without any greater resistance than their own weight, but would be assisted in closing suddenly at the exact instant by a spring or by tappets.

Arrangement of Valves.—The arrangement of the valves in the suction and delivery chambers with respect to the position of the suction and discharge branches is an important matter, because the valves are liable to be held up from their face if they are exposed to side currents. Referring to Fig. 226, the first diagram illustrates a delivery clack in which the water rushes sideways

immediately on escaping past the seat. The probability is that such a valve would not work satisfactorily unless the number of pulsations were very small. The rush of the water would tend to press the valve to one side, and on the suction stroke of the plunger the valve would fail to seat. The correct arrangement is shown in the second diagram where the water rises vertically after passing the seat, and on the suction stroke any reflux accelerates the closing of the valve.

For large pumps with high pressures of, say, 300 lbs. per square inch, where more than one suction and one delivery valve are required, these valves should each be placed in a separate pot chamber instead of grouped together in one common chamber, and each valve should be accessible by removing a small cover. This design keeps down the size of the chambers, and they can be made strong enough to resist the heavy pressures and shocks without employing excessive thickness of metal. Also,

Fig. 226.

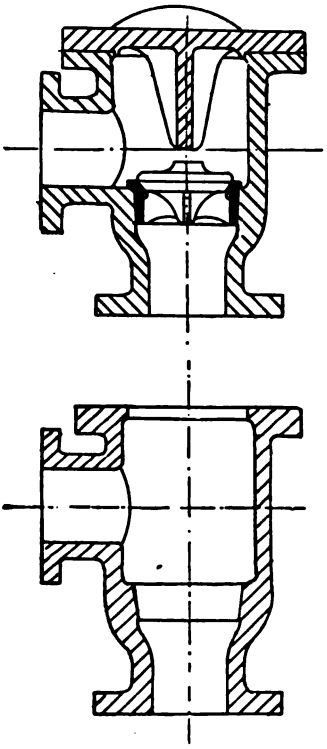

Fig. 227.

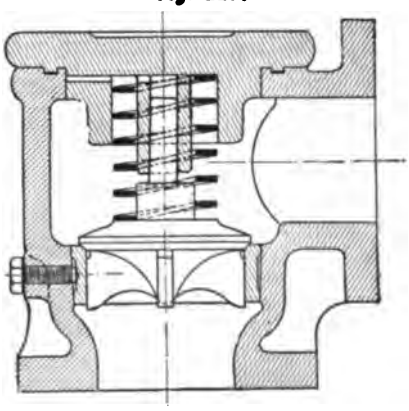

by this design, the pump end is built up of small sections, and a fracture in one part does not entail the renewal of the whole pump.

Spring-loaded Valves.—In some pumps, particularly those for boiler feeding which are driven from the main engine against high pressure, it is difficult to prevent shocks and banging with ordinary clacks. As usually arranged, the number of strokes of the pump is necessarily the same as the engine strokes, and unless the clacks have considerable lift the velocity of the water through

the valves is high. A large lift is not conducive to quiet running, for the valves are driven against the stops with a hammering action, and remain in their topmost position until the plunger has commenced another stroke, when they descend with great violence. Spring-loaded valves are desirable in such cases, since they limit the lift of the valve exactly in accordance with the speed of the water passing through, and the valves are closed promptly without a hammering action. If the action of a spring-loaded clack could be observed, it would be found that when the plunger velocity was greatest the valve would have its greatest lift, and would gradually descend as the plunger reached the end of the stroke, thus avoiding injurious slamming action. A type of spring-loaded valve is shown in the accompanying figure. It is designed so that, in the event of the spring breaking, the valve will not be carried away by the water.

Double-beat Valve.—The double-beat clack is adapted for higher pressures and larger sizes than a single clack. For a given opening the lift is much less, a matter which has a great influence on the working of heavy pressure pumps. The accompanying figure illustrates a type that is frequently used in large pumps supplying towns' water, and for other important services. Both valve and seat are of gun-metal, and the core space is filled up with lead to ensure prompt closing before reflux takes place. Although this weight causes a little resistance against the water on the suction stroke it is of great value in preventing shocks in the rising main. Consider the case of a pump delivering into a rising main 300 feet in vertical height. As the pump delivers, the whole body of water in the main is put in motion. When the bucket has reached the end of the stroke and begins to return, unless the delivery valve has closed, the whole of the water in the main will descend until the delivery valve closes, when it will be suddenly checked, and the effect of such a large volume of almost incompressible matter being brought suddenly to rest may be easily imagined. When weighted valves are used they close slightly before the stroke is quite completed, and thus prevent any reflux action in the rising main. Air vessels render water hammers in the rising main less violent, but a prompt valve action is also very effective in mitigating their intensity.

Fig. 228.

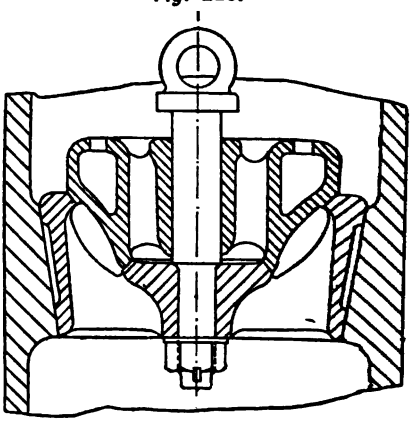

Reverting to the illustration, it may be mentioned that the ribs are feathered to offer little resistance to the water. The seat is driven into a taper barrel which is smeared with a thin coat of red lead. The spindle is usually made of delta metal to prevent corrosion, and the forged ring is for the purpose of withdrawing the valve and seat. The delta-metal nut securing the spindle should be effectively secured against slacking back. A good method is that shown in the figure, which consists of a steel cotter partly recessed in the nut, split at the thin end, and opened out. It will be noticed that the collar on the spindle forms a stop to limit the lift of the valve, and it is important that the part of the valve which strikes this collar should be rounded as shown, to prevent spreading of the metal, due to the valve striking the collar, which would cause the valve to bind on the spindle.

Multiple-ported Valve.—A multiple-ported ring valve is shown in Fig. 229. It is suitable for large pumps and high

Fig. 229.

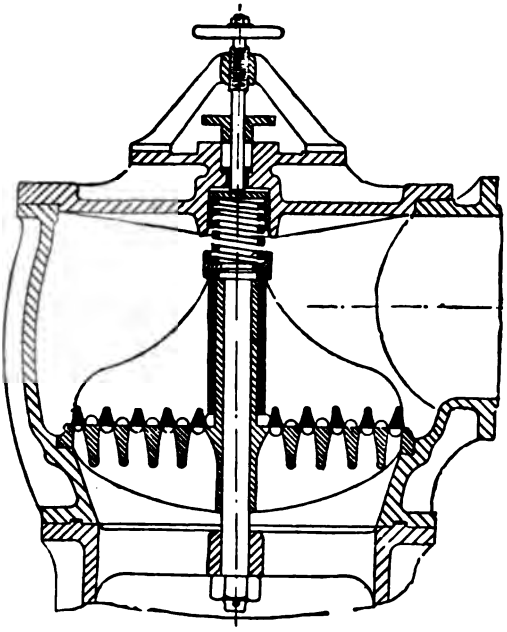

pressures. The seat is held down by a central bolt passing through a sleeve in the seat which forms a guide for the valve. The design embodies a spring-closing arrangement, with external adjustment the spring serving the same purpose as the lead filling in the previous example. Both valve and seat are of phosphor bronze or gun-metal.

Shocks.—The severe shocks entailed when pumping through long mains are not always realised by those who have not had experience in pump work, and it may be instructive to consider the action, assuming the suction pipe, pump, and delivery main to be full of water, and the pump to be at work. Under these conditions as the plunger starts on the suction stroke it is followed by a plug of water in the suction pipe, which must acquire a certain velocity depending on the relative areas of the plunger and suction pipe. Now at the end of the stroke this flow ceases, and all the water that has passed through the suction valve has a reverse flow imparted to it almost instantly. Now water being practically incompressible this action is analogous to so much solid matter being concentrated in the plunger, and the effect on the moving parts is similar to having a plunger of great weight. The great shock, however, occurs at the commencement of the delivery stroke. As the delivery valve opens the whole volume of water in the rising main is inert and may be considered as a solid plug of water. The whole mass of this water has to be set in motion, and the effect on the plunger is similar to striking a solid body of like weight, whilst the shocks on the pump barrels and valve chambers are equally severe. In the rising main the shock diminishes towards the outlet, where it is practically nil. The above action takes place when the pump draws in a full barrel of water, but when the area of the suction valves is too small for the capacity of the pump, or where the springs on the valves are too strong and do not allow the pump to take a full charge, matters become worse. At the end of the suction stroke there will then be a certain void, and, as the delivery stroke commenced, this void will be filled by the advancing plunger before it strikes the water. Consequently the plunger will have a higher speed when the delivery valve opens. It is not difficult to imagine what takes place when the water in the rising main is set in motion. These shocks are greatly diminished by air vessels, but, from what has been said, it will be seen that a prompt valve action is very important, particularly in the case of suction valves.

With regard to the air vessels it is evident that the best place for them is as near the pump as convenient, and it will also be seen that the valves should be placed as near the barrel as possible. It is an interesting fact in hydraulics that the shocks are more severe when delivering into a long main with a low head than those which occur with much higher pressures and short mains, because in the latter case the inertia of the water has little effect.

High-Pressure Hydraulic Valves.—Figs. 230 to 233 illustrate various types of hydraulic valves suitable for high pressures from 800 to 8,000 lbs. per square inch. Fig. 230 is a suction valve provided with wings, at the lower end of which a split pin is inserted to limit the lift. The material is hydraulic metal, which may have a composition of 1 lb. copper, 2½ ozs. tin, ¾ oz. spelter for pressures up to 2 tons per square inch. Harder metal for higher

pressures is obtained by increasing the proportion of copper. The suction valve (Fig. 230) is turned from a round bar, and three flats are milled or planed to form water passages, leaving turning portions to form the guide. The saw cut on the crown is for grinding purposes, and a tapped hole should be provided for the insertion of a screwed rod for the withdrawal of the valve. The material may be hydraulic metal for water, but for oil presses and pressures over 2 tons per square inch mild steel is generally used. The best angle for seat is 45°, and the width measured horizontally or vertically may vary from $\frac{1}{16}$ to $\frac{1}{4}$ inch, varying with the size of valve and pressure, the crushing pressure on the seat not exceeding 3,000 lbs. per square inch. Hydraulic valves should be made very substantial above the seat (see dimension K, Fig. 230) in order to resist the hammering action and the pressure, and in no case should it be less than $\frac{1}{4}$ inch. The lower end of the valve in Fig. 231 is shown conical to ease the flow of water.

Great attention should be paid to the location of the valves with respect to the delivery passages, so as to be out of the influence of side currents, as explained in a previous page.

Various forms of high-pressure delivery valves are illustrated in Figs. 231 to 233. Fig. 232 is a good form, and provision is made for

Fig. 230.

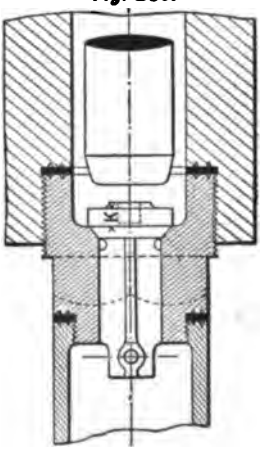

Fig. 231.

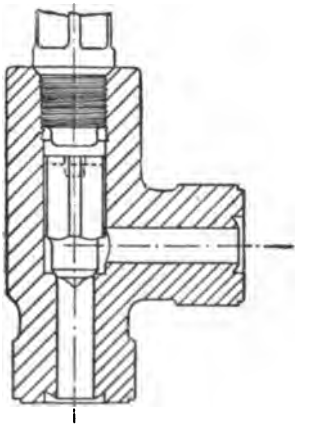

twisting the valve at each pulsation by the inclined grooves in the guiding head. It is a common design for valves not exceeding $\frac{3}{8}$ inch diameter. The ball valve (Fig. 233) is sometimes used, and is very satisfactory. It is cheaper than the other types, and works longer without attention. The points to watch in the design are that there is no possibility of the valve escaping past the guard, or wedging in the guard in the attempt to follow the current; and that the water way is not obstructed when the ball lifts from its

Fig. 232.

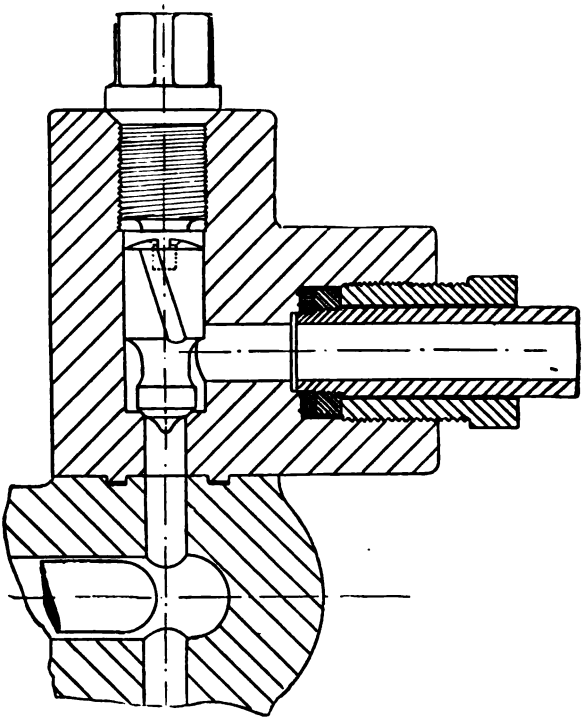

Fig. 233.

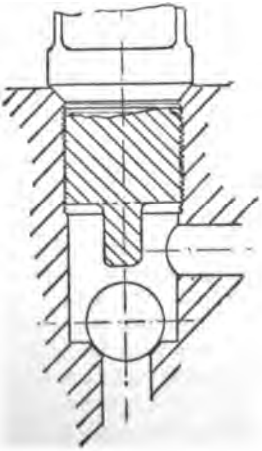

Fig. 234.

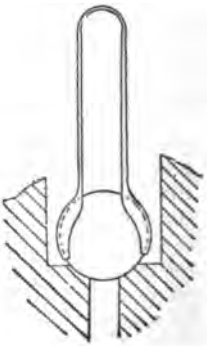

seat. The withdrawal of the valves from their chambers requires a special tool which may take the form of a pair of tongs (Fig. 234). The valve chamber must be made large enough to pass these tongs.

Flexible Valves.—The type of valve shown in the following illustrations can be made suitable for pressures up to 150 lbs. per square inch, and for higher speeds than the metallic valves previously dealt with. Such a valve is noiseless in its action, and can be made of large size if desired. Fig. 235 shows the usual form, and the illustration needs little description.

Fig. 235.

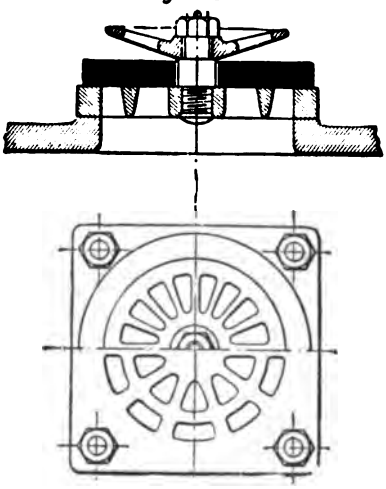

The guard is perforated to prevent the rubber clinging to its surface. The ribs in the grids should be well rounded on the underside and tapered, and the top of the grid should have sharp corners dressed off to prevent cutting of the rubber. When these valves have been at work some time there is a tendency to punch the rubber through the holes in the grid, and to avoid this to a great extent the ribs in the grids may be inclined to give the rubber a slight twist each pulsation. This increases the life of the valve 100 per cent. or more.

The objection to this type is that it offers too much resistance to opening, because half the fibres of the whole rubber are compressed when the valve is lifted. A very simple illustration will show this. If a thick disc of rubber be carried on the top of an open cylinder it will support a considerable weight without undue deflection, and this condition is analogous to that of the valve being forced open by water from beneath the seat. Now support the disc on a thin straight edge and it will yield to a very slight

pressure on the part of the rim remote from the support. Fig. 236 illustrates a valve in which the rubber is in a similar condition to the disc in the second experiment. The grid should be provided with sloping ribs so that the bending is not on the same line every pulsation, and the central hole should be a little larger than the boss which passes through it so that the rubber is free to twist.

Fig. 236.

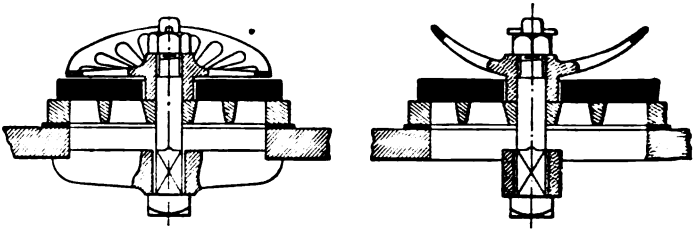

Fig. 237 shows a square or rectangular valve held between the guard and seat down one side. This design gives a free opening, but the bending is always on the same line, and the grids support the same strip of rubber each time the valve closes. Figs. 236 and 237 are most satisfactory for air and vacuum pumps, when easy opening is essential to efficiency, and are much to be preferred to Fig. 235, and are also by far the best for the suction valves of pumps having a long lift on the suction side.

Fig. 237.

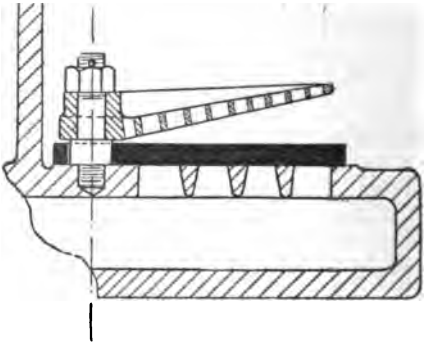

An obvious development from the foregoing type is a rubber valve lifting bodily from its face and closed by a light spring. Fig. 238 shows a good design. The seat and spindle are cast together and driven hard into a taper hole in the valve deck. A suitable taper is 1 in 16 on the diameter. Sometimes the seat is cut with a fine thread and screwed into the valve deck, or it may be held down by a cross-bar and bolt similar to that shown in Fig. 236. The spring is phosphor bronze and may have a strength

of $\frac{1}{4}$ lb. per square inch of area through the grid when the valve is closed. The spring washer and nut are also phosphor bronze or gun-metal, and are secured by a copper split pin. This detail is important, and the omission of means to prevent nuts working loose often causes serious breakdowns to pumps. When used in groups these valves are sometimes placed on a loose valve deck which is secured to the pump chamber by studs, bolts, or wedges as may be suited to the pump arrangement. With this design loose seats are unnecessary, the grids being cast with the deck. In all designs the rubbers should be removed from the influence

Fig. 238.

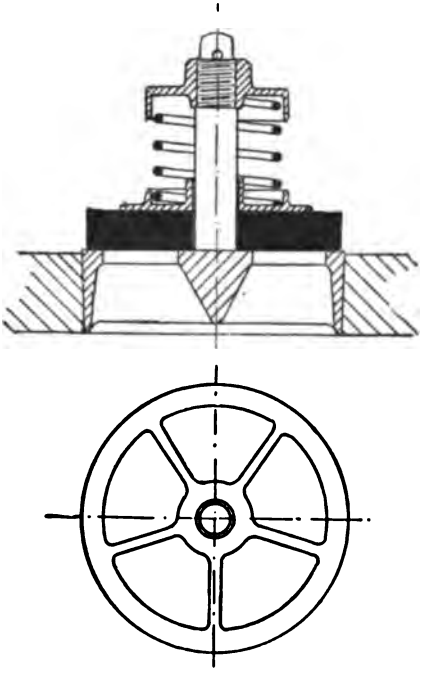

of side currents which interfere with prompt action. The nuts of all valves should be of gun-metal or bronze to prevent them rusting on the studs or bolts, and when corrosion is particularly severe cap nuts should be used.

Disposition of Valves.—When rubber valves are placed in the buckets of high duty pumps, the problem is to obtain sufficient area through the bucket to keep the water velocity low. A considerable portion of the bucket area is occupied by the rim and the central boss for the rod, and if the valves are simply placed on a flat deck on the upper side of the bucket it will be found, even for

a low lift pump, that the total area through the grids would not be more than 30 per cent. of the total bucket area. By arranging the valves in tiers, as shown in Fig. 239, ample area is obtained. This design is adopted in the beam engines at the Coventry Water Works. The mean bucket speed is about 130 feet per minute, but the calculated water velocity through the valves is only 170 feet per minute maximum, which shows that the area through the valve seats is greater than the area of the pump bucket.

In arranging the head valves of steam-engine air pumps it is important that the bottom of the overflow outlet be placed a little above the top of the valves so that they are drowned. When this precaution is not taken the valves are liable to pass air as the bucket descends. On the other hand, care should be taken that the outlet is not higher than is necessary to seal the valves, otherwise useless work and shocks will be thrown upon the pump. A rectangular overflow branch with the long side horizontal is to be preferred to a circular branch, because it is better adapted to prevent a head of water accumulating in the hot well when the pump delivers.

Fig. 239.

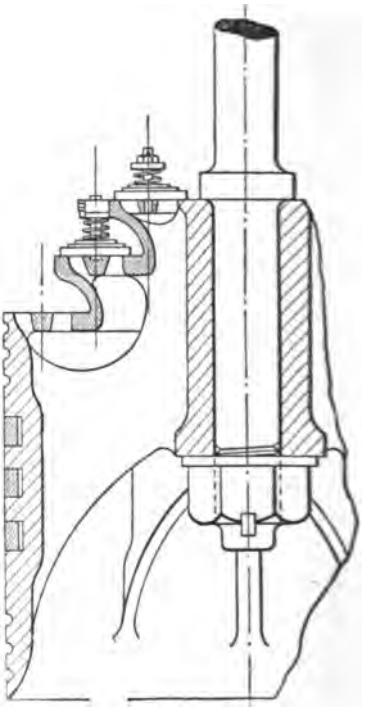

Sometimes flexible valves are used in an inclined, vertical, or even an inverted position. When vertical or inverted they should be circular and held in the centre of the disc, otherwise there is a likelihood of their hanging from their seat. The seat should also be concave so that the rubber will not fall away from the face. The commonest examples of inclined valves are found in the foot valves of steam-engine vertical air pumps. Their usual shape is rectangular, the rubber being held along the top edge between the guard and the seat or grid which is secured in position by wrought-iron wedges. Inverted valves are sometimes found in the horizontal air pumps of steam engines.

Valve Grids.—The spacing of the grids for flexible valves is perhaps the only matter of design which needs comment. The object to be sought is to effect a judicious compromise between the low initial cost and great durability of the valves. Narrow ribs,

widely spaced, give more area of passage for a given size of valve, this involves smaller valve chambers, hand hole covers, guards and seats; but narrow ribs and wide spacings do not conduce to valve durability. It has been the custom of several firms with whose practice the writer is acquainted to make the spacing for grids of air-pump valves not more than 1½ inches square. The maximum unbalanced pressure in such cases may be taken at 25 lbs. When the holes are rectangular they may be longer than 1½ inches, provided the width does not exceed 1¼ inches. Having designed the spacings on these lines the thickness of the bars was decided chiefly by questions of moulding, but no rubber was allowed to have a bearing pressure on the grid exceeding 300 lbs. per square inch, so that taking a pressure of 25 lbs. as being the maximum, the bearing area was never less than one-twelfth the total area of the rubber, and often considerably more. The thickness of the rubbers varied from ¾ to 1 inch.

Dermatine Valves.—When a valve of the type shown by Fig. 238 is used flexibility of the material is no longer essential,

Fig. 240.

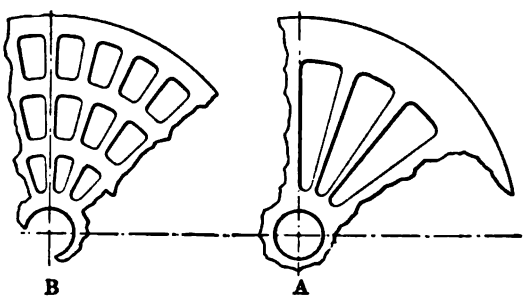

and accordingly compositions are frequently used which are harder than rubber and better able to resist high pressures and oily water.

Dermatine has been found to answer very successfully. Being harder than india-rubber it is better able to withstand high pressures, and it has also valuable heat and oil resisting qualities which are essential for some services, notably for the valves of air pumps working in conjunction with surface condensers. The hardness of dermatine renders it liable to cutting by sharp edges, and consequently the grids should be carefully rounded off on the top face. Inclined grids on the grating are also to be strongly recommended in order to distribute the wear over the whole surface of the valve. In the matter of spacing for the grids the makers recommend that for air-pump valves, the width between the gratings should not exceed 1¼ inches at the circumference or widest part, as shown in the accompanying sketch at A. When the valve is of large size this shape of grid is impracticable, and the form shown by B in the sketch is usually adopted.

Leather Valves.—Leather is generally used for retainer valves for suction pipes, and for low lift sewage pumps and pumps dealing with gritty water. Fig. 241 illustrates a common form of retainer valve with flare mouth suction pipe. The leather is strengthened

Fig. 241.

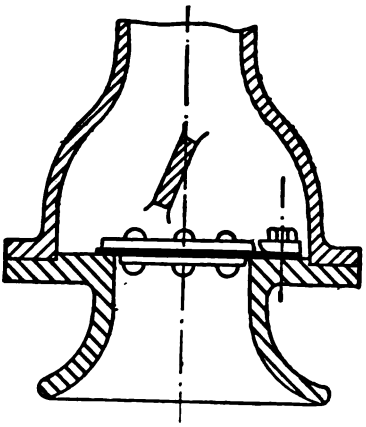

Fig. 242.

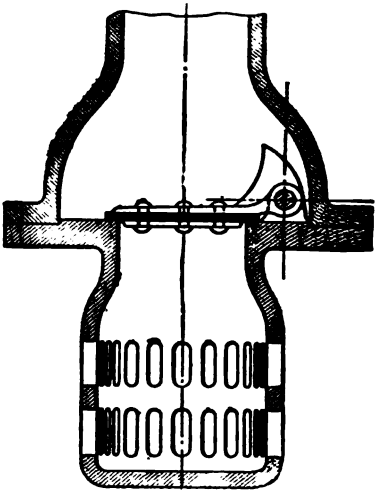

on both sides by wrought-iron plates and nipped between the flange of the mouthpiece and a wrought-iron plate. This design gives a passage unobstructed by grids, and grit does not damage the faces, but it is open to the objection that the continued bending

Fig. 243.

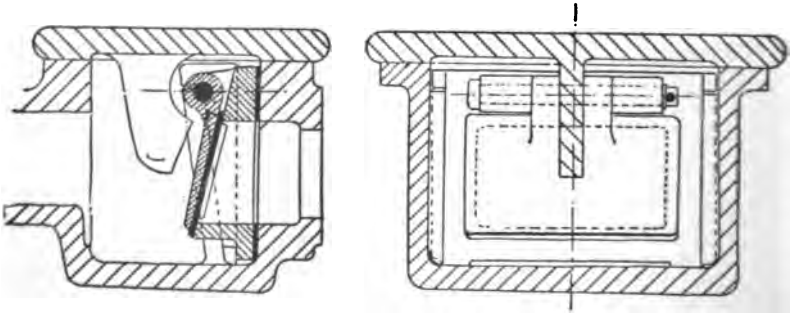

of the leather may crack it. Where the water is not very gritty and the suction lift is high the type shown by Fig. 242 is better, it opens more easily and is more durable. When used as a suction or delivery valve this class may take the form shown by Fig. 243.

Here the seat is loose and placed in the valve chamber with the valve attached, and secured in position by wrought-iron wedges. The stop to restrict the lift is cast with the cover, the latter also serving to keep the wedges in position, and the joint between the seat and the chamber is made with sheet rubber, there being no machine work on the grid or inside the valve chamber. For large sizes, leather valves are usually made in sections to reduce the

Fig. 244.

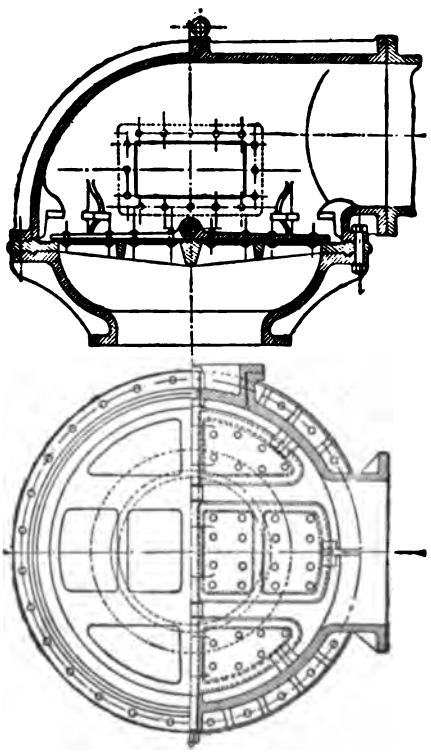

lift. A common design is exemplified by Fig. 244. The bearing pressure on the seat of leather valves should not exceed 600 lbs. per square inch.

Reflux Valves.—A retention or reflux valve of large size and for a fairly high pressure is shown by Fig. 245. Such valves are placed in the delivery main of important pumps, as near to the delivery valves as convenient, and their object is to arrest any

reflux of water in the mains in case of failure of the pumps. In the present example the main is 24 inches diameter, and the pressure 80 lbs. per square inch. The valve consists of a well-ribbed cast-iron plate, hinged on a spindle carried in two wedged

Fig. 245.

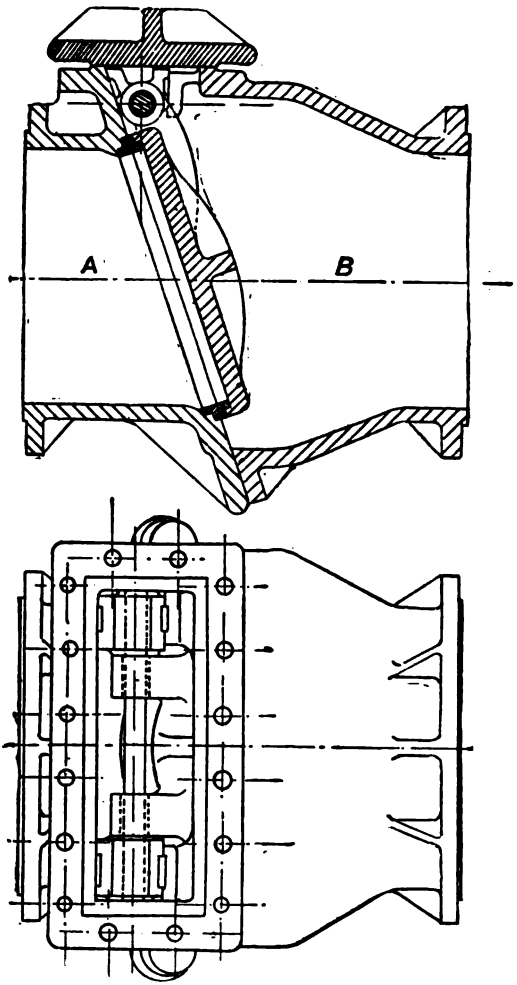

blocks fitting into the valve casing. The valve hinges are bushed with brass and the spindle is prevented from turning by a pin through one of the wedge blocks. The valve facing is a ring of gun-metal pinned to the valve by gun-metal countersunk screws.

The seat is a similar ring let into the casing and secured like the valve facing. In this example the seat is $1\frac{1}{2}$ inches wide, which gives a bearing pressure of 400 lbs. per square inch on the seat when the valve is closed. A much greater pressure might be allowed, but in this example the width is decided by the $\frac{5}{8}$-inch screws which secure the ring. It will be noticed that the valve chamber is enlarged to give ample water passage when the valve is open. When fully open this valve would hang with about 6 inches between the faces on the line A B, and when in this position the passage between the valve disc and the casing should at no point be less than the width between the faces at the same part of the valve. When this point is neglected varying velocities of the passing water are obtained, and although the total area between the disc and the casing may be quite equal to the area past the valve faces, the results will not be so good as when the water flows past in a uniform stream of constant velocity.

"Haste" Valve.—The next figure shows the Haste patent

Fig. 246.

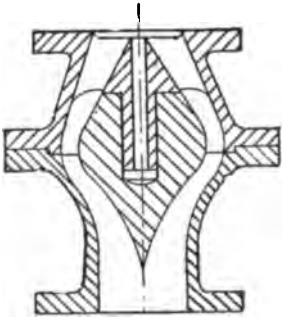

valve. The features are the simplicity of the valve itself, the almost straight flow of the water in passing through the valve, and the large area of the opening. The valves are sometimes made of cast iron and sometimes of dermatine. The valve is shown full open and bearing against the stop which is shaped to give an easy flow to the fluid, and the central hole in the stop destroys the vacuum which would otherwise be formed as the valve seated, supposing it possible for seating to take place.

INDEX.

The letters placed after the references indicate to which section of the book they belong.

S.E. = *Steam Engine.* G.E. = *Gas Engine.*
A.C. = *Air Compressor.* P. = *Pump.*

A

ADVANTAGES of Corliss gear (S.E.), 94.
Air governor, Fraser & Chalmers' (A.C.), 232.
Allan straight link motion (S.E.), 79.
Angle of advance (S.E.), 12, 115, 130.
,, of vibration (S.E.), 99.
,, Reduction of dwelling- (S.E.), 97.
Area of passages (P.), 237.
,, of ports (S.E.), 1.
,, of valve openings (G.E.), 184.
,, of valves (A.C.), 209.
Arrangement of steam and exhaust valves (S.E.), 101.
,, of valves (C.E.), 187, 191.
,, of valves (P.), 238.
Automatic easing gear (A.C.), 231.
,, knock-off gear (S.E.), 140.
,, slide expansion gear (S.E.), 45.
,, valves (A.C.), 210.

B

BALANCED slide valve (S.E.), 24.
,, valve (G.E.), 203.
Ball valve (P.), 237.
Beadles' valve gear (S.E.), 176.
Beau de Rochas' cycle (G.E.), 185.
Blake valve gear (S.E.), 181.
Borsig valve gear (S.E.), 171.
Bremme valve gear (S.E.), 89.
Bridle, Corliss valve (S.E.), 105.

C

CAMS, Design of (G.E.), 187.
,, ,, (S.E.), 160.
,, Position of (G.E.), 191, 194.
,, Spiral (G.E.), 195.
Catches, Clearance of (S.E.), 118.
,, Table of (S.E.), 156.
Characteristic line (S.E.), 63, 66.
Clack valve (P.), 235.
Coiled valve (A.C.), 215.
Compression (G.E.), 204.
,, (S.E.), 8.
Connecting-rod, Effect of (S.E.), 12.
Corliss exhaust valve, Proportions of (S.E.), 106.
,, gear, Advantages of (S.E.), 94.
,, ,, Classification of (S.E.), 94.
,, ,, Diagram for (S.E.), 102.
,, steam valve, Proportions of (S.E.), 104.
,, valve (A.C.), 223.
,, ,, bridle (S.E.), 105.
,, ,, Double-ported (S.E.), 106.
,, ,, gear, Dobson (S.E.), 137.
,, ,, ,, Farcot (S.E.), 153.
,, ,, ,, Frikart (S.E.), 150.
,, ,, ,, Goodfellow (S.E.), 141.
,, ,, ,, Hick - Hargreaves (S.E.), 97, 135.
,, ,, ,, Inglis & Spencer (S.E.), 134.
,, ,, ,, Musgrave (S.E.), 126.
,, ,, ,, Pollit & Wigzell (S.E.), 135.
,, ,, ,, Reynolds (S.E.), 113.
,, ,, ,, Wood's (S.E.), 130.
,, valves and crank shaft governors (S.E.), 111.
,, ,, Diameter of (S.E.), 98.
Cornish valve (S.E.), 157.
Crank-pin diagram (S.E.), 70, 78.
,, -shaft governor expansion gear (S.E.), 54.
,, ,, ,, Robinson's (S.E.), 57.
,, ,, ,, Westinghouse (S.E.), 56.

Crank-shaft governor with Corliss valves (S.E.), 111.
Crossed rods (S.E.), 64.
Cut-off, Point of (S.E.), 3, 58.
,, regulator (S.E.), 38.
Cycle, Beau de Rochas' (G.E.), 185.
,, Variations in (G.E.), 197.

D

Dashpot springs (S.E.), 148, 174.
Dashpots (S.E.), 146.
Delivery valve (P.), 243.
Dermatine valves (P.), 249.
Diameter of Corliss valves (S.E.), 98.
Disposition of valves (G.E.), 187, 191.
,, ,, ,, (P.), 238, 247.
,, ,, ,, (S.E.), 100.
Divided slide valves (S.E.), 10.
Dobson trip gear (S.E.), 137.
Double-bar link (S.E.), 73.
Double-beat valve (P.), 240.
Double-ported Corliss valve (S.E.), 106.
,, Meyer gear (S.E.), 41.
,, slide valve (S.E.), 16.
Drop valve, Double-beat (S.E.), 157.
,, Four-beat (S.E.), 159.
,, gear, Borsig (S.E.), 171.
,, ,, Kerchove (S.E.), 174.
,, ,, Marshall (S.E.), 167.
,, ,, Robey (S.E.), 165.
,, ,, Sulzer (S.E.), 169.
,, ,, Tosi (S.E.), 172.
Duplex valve gear (S.E.), 178.
Dwelling angle (S.E.), 97.

E

Eccentrics driving obliquely (S.E.), 76.
,, for gas engines (G.E.), 195.
Effect of connecting-rod (S.E.), 12.
Ellipse diagram (S.E.), 14, 33.
Exhaust valve, Corliss (S.E.), 106.
,, ,, Gas engine (G.E.), 195.
,, Velocity of (G.E.), 184.
,, ,, ,, (S.E.), 1.
Expansion gear, Automatic slide (S.E.), 45.
,, ,, Link (S.E.), 46, 52.
,, ,, Meyer (S.E.), 36.
,, ,, Rider (S.E.), 52.
,, ,, Ruston-Proctor (S.E.), 52.
,, ,, with crank shaft governor (S.E.), 54.
,, Range of, 58.
Expansion regulator (S.E.), 38.
,, valve diagram (S.E.), 29.

F

Farcot cylinder (S.E.), 155.
,, trip gear (S.E.), 153.
Fraser & Chalmers' air governor (A.C.), 232.
,, ,, compressor (A.C.), 219.
Flexible valve (P.), 245.
Fluids, Velocity of (G.E.), 184.
Frikart trip gear (S.E.), 150.

G

Gas engine, Koerting (G.E.), 206.
,, ,, Nuremberg (G.E.), 206.
,, ,, Oechelhäuser (G.E.), 208.
,, ,, Tangye (G.E.), 205.
,, ,, Westinghouse (G.E.), 205.
,, valve, Size of (G.E.), 185.
Gooch link motion (S.E.), 74.
Goodfellow's trip gear (S.E.), 141.
Governing (G.E.), 198.
,, (S.E.), 145.
Governor, Air (A.C.), 232.
,, Crank-shaft (S.E.), 54, 111.
,, Hartnell (S.E.), 46.
,, Robey (G.E.), 199.
,, Robinson's (S.E.), 57.
,, Westinghouse (S.E.), 56.
Grids, Valve (P.), 248.

H

Hackworth valve gear (S.E.), 88.
Hartnell governor (S.E.), 46.
Haste valve (P.), 253.
Hick, Hargreaves' trip gear (S.E.), 135.
,, ,, valve motion (S.E.), 97.
High-pressure valves (P.), 242.
Hinge valve (A.C.), 213.
,, (P.), 250, 251.
Hit and miss governing (G.E.), 198.

I

Ignition valve (G.E.), 193.
India-rubber valves (A.C.), 213.
,, ,, (P.), 245.
Ingersoll-Sergeant compressor (A.C.), 221.

Inglis and Spencer trip gear (S.E.), 134.
Injection, Water (G.E.), 204.
Inside edge cut-off valves (S.E.), 40.

J

Joy valve gear (S.E.), 83.

K

Kerchove valve (S.E.), 174.
Koerting gas engine (G.E.), 206.
Koster valve gear (A.C.), 226.
Knock off gear (S.E.), 140.

L

Lap, Effect of negative (S.E.), 6, 34.
Lead (S.E.), 2.
Leather valves (P.), 250.
Levers, Governor (S.E.), 145.
,, Position of Corliss (S.E.), 100.
Lift of valves (P.), 238.
Line, Characteristic (S.E.), 63, 66.
Link expansion gear (S.E.), 46, 52.
,, motion, Allan (S.E.), 79.
,, ,, Gooch (S.E.), 74.
,, ,, Stephenson (S.E.), 63.
,, ,, Walchaërt (S.E.), 91.
Links, Proportions of (S.E.), 74.
Lost motion (S.E.), 145.

M

Marshall trip gear (S.E.), 167.
Meter, Size of (G.E.), 184.
Meyer expansion gear (S.E.), 36.
,, ,, double - ported (S.E.), 41.
Movement of Corliss valves (S.E.), 95, 124.
,, of trip levers (S.E.), 119, 145.
Multiple-ported valve (P.), 241.
Musgrave trip gear (S.E.), 126.
Mushroom valve (A.C.), 217.
,, (G.E.), 183.
,, (P.), 235.

N

Negative lap (S.E.), 6, 34.
Nuremberg gas engine (G.E.), 206.

O

Oechelhäuser gas engine (G.E.), 208.
Open and crossed rods (S.E.), 64.

P

Pins, Slide valve (S.E.), 24.
Piston curve (S.E.), 44.
,, inlet compressor (A.C.), 221.
,, valve (S.E.), 25.
Pollit & Wigzell's trip gear (S.E.), 135.
Ports, Area of (A.C.), 209.
,, ,, (G.E.), 184.
,, ,, (S.E.), 1.
Position of cams (G.E.), 191, 194.
,, of valve levers (S.E.), 100.
,, of valves (S.E.), 100.
Positive valves (A.C.), 210.
Principle of radial gears (S.E.), 83.
,, of trip gears (S.E.), 113.
,, of Zeuner diagram (S.E.), 4, 31.
Proportions of links (S.E.), 74.

R

Radial gear, Bremme (S.E.), 89.
,, ,, Hackworth (S.E.), 88.
,, ,, Joy (S.E.), 83.
,, ,, Principle of (S.E.), 83.
,, ,, Walchaërt (S.E.), 91.
Range of cut-off (S.E.), 58.
,, of trip (S.E.), 115.
Rapid and sluggish cut-offs (S.E.), 38.
Reflux valve (P.), 251.
Regulator, Expansion (S.E.), 38.
Release (S.E.), 8.
Relief rings (S.E.), 24.
Resultant circles (S.E.), 30.
Reversing engine valve gear (S.E.), 181.
,, gear, Allan (S.E.), 79.
,, ,, Bremme (S.E.), 89.
,, ,, Gooch (S.E.), 74.
,, ,, Hackworth (S.E.), 88.
,, ,, Joy (S.E.), 83.
,, ,, Single eccentric (S.E.), 59.
,, ,, Stephenson (S.E.), 63.
,, ,, Walchaërt (S.E.), 91.
Reynold's trip gear (S.E.), 113.
,, valve diagram (S.E.), 43.
Rider valve gear (S.E.), 52.
Riedler valve (A.C.), 218.
Ring valve (A.C.), 219.
Robey governor (G.E.), 199.
,, valve gear (S.E.), 165.

Robinson's governor (S.E.), 57.
Rolling levers (G.E.), 195.
,, ,, (S.E.), 170.
Rotary valve gear, Beadle's (S.E.), 176.
Ruston-Proctor's link expansion gear (S.E.), 52.

S

SCAVENGING (G.E.), 205.
Seats, Width of Valve (G.E.), 183.
,, ,, ,, (S.E.), 158.
,, ,, ,, (P.), 235.
Shocks (P.), 242.
Slide expansion gear (S.E.), 29.
,, valve, (A.C.), 223.
,, ,, (S.E.), 1.
,, ,, Divided (S.E.), 10.
,, ,, Double-ported (S.E.), 16.
Slip curve (S.E.), 69.
Slot link (S.E.), 72.
Speed of air (A.C.), 209.
,, of exhaust (G.E.), 185.
,, ,, (S.E.), 1.
,, of fluids (G.E.), 184.
,, of steam (S.E.), 1.
,, of trip gears (S.E.), 125.
,, of water (P.), 237.
Spindles, Valve (S.E.), 21.
Spiral cams (G.E.), 195.
Spring-loaded valves (A.C.), 220.
,, ,, (P.), 239.
Springs, Dashpot (S.E.), 148, 174.
Steam valve, Corliss (S.E.), 104.
,, Velocity of (S.E.), 1.
Stephenson link motion (S.E.), 63.
Straight link motion (S.E.), 79.
Suction (P.), 237.
Sulzer valve gear (S.E.), 169.

T

TANDEM engine valve gear (S.E.), 21.
Tangye gas engine (G.E.), 205.
Templet, Use of (S.E.), 69.
Thom's trick valve (S.E.), 18.
Throttle governing (G.E.), 198.
Tosi valve gear (S.E.), 172.
Trick valve (S.E.), 17.
,, Thom's (S.E.), 18.
Trip gear, Advantages of (S.E.), 113.
,, Borsig (S.E.), 171.
,, Dobson (S.E.), 137.
,, Farcot (S.E.), 153.
,, Frikart (S.E.), 150.
,, Goodfellow (S.E.), 141.
,, Hick, Hargreaves (S.E.), 135.
Trip gear, Inglis and Spencer (S.E.), 134.
,, Kerchove, 174.
,, Marshall (S.E.), 167.
,, Musgrave (S.E.), 126.
,, Pollit and Wigzell (S.E.), 135.
,, Principle of (S.E.), 113.
,, Reynolds (S.E.), 113.
,, Robey (S.E.), 165.
,, Speed of (S.E.), 125.
,, Sulzer (S.E.), 169.
,, Tosi (S.E.), 172.
,, Wheelock (S.E.), 155.
,, Winding engine (S.E.), 161.
,, Wood (S.E.), 130.
Trip levers, Movement of (S.E.), 119.
Tripping catches (S.E.), 155.

U

UNLOADING devices (A.C.), 231.

V

VACUUM breaker (S.E.), 140.
Valve grids (P.), 248.
,, openings, Area of (A.C.), 209.
,, ,, ,, (G.E.), 184.
,, ,, ,, (P.), 237.
,, ,, ,, (S.E.), 1.
Velocity of air (A.C.), 209.
,, exhaust (G.E.), 185.
,, ,, (S.E.), 1.
,, fluids (G.E.), 184.
,, steam (S.E.), 1.
,, water (P.), 237.

W

WALCHAERT valve gear (S.E.), 91.
Water-cooled valves (G.E.), 197.
,, injection (G.E.), 204.
,, velocity (P.), 237.
Westinghouse gas engine (G.E.), 205.
,, governor (S.E.), 56.
Wheelock trip gear (S.E.), 155.
Winding engine trip gear (S.E.), 161.
Wood trip gear (S.E.), 130.
Wrist-plate action (S.E.), 96.
,, pin, Location of (S.E.), 98.

Z

ZEUNER diagram, Principle of (S.E.), 4, 31.

BELL AND BAIN, LIMITED, 43 MITCHELL STREET, GLASGOW.

A SELECTION FROM

CHARLES GRIFFIN & CO.'S PUBLICATIONS

OF

SCIENTIFIC AND TECHNICAL WORKS.

MESSRS. CHARLES GRIFFIN & COMPANY'S PUBLICATIONS may be obtained through any Bookseller in the United Kingdom, or will be sent Post-free on receipt of a remittance to cover published price. If the book is marked "NET" Postage should be added. To prevent delay, Orders should be accompanied by a Cheque or Postal Order crossed "UNION OF LONDON AND SMITH'S BANK, Chancery Lane Branch."

. *For INDEX, see next vage.*

☞ **COMPLETE TECHNICAL, MEDICAL, and GENERAL CATALOGUES forwarded Post-free on Application.**

LONDON:

EXETER STREET, STRAND.

1/6/07.
D.T. 64.

PAGE
ADAMS (W. P.), Motor Mechanism, . 33
AITKEN, (T.), Road Making, . . 79
ALFORD (J.), Mining Law, . . 57
ALLINGHAM (W.), Meteorology, . 41
ANDREWS (L.), Electricity Control, 48
ANGLIN (S.), Design of Structures, . 26
ARCHBUTT & DEELEY, Lubrication, 32
ATHERTON (Wm.), Design of Beams, 26
BARKER (D. W.), Works by, . 40, 41
BAUER (M.), Precious Stones, . . 68
BERINGER (J. J. & C.), Assaying, . 66
BICHEL & LARSEN, Explosives, . 58
BILES (J. H.), Works by, . . 28, 37
BJÖRLING, Peat, ... 75
BLACKMORE (E.), Mercantile Marine, 40
BLOUNT (B.) and BLOXAM (A. G.), Chem. for Engrs. and Manufacturers, 46, 71
BLYTH (A. Wynter), Foods and Poisons, 72
BORCHERS (Dr.), Electric Smelting, 67
BROUGH (B. H.), Mine-Surveying, . 56
BRUCE (Robt.), Food Supply, . . 53
BUCK (R. C.), Algebra & Trigonometry, 42
BURNS (D.), Colliery Electricity, . 56
BUTTERFIELD (W. J. A.), Gas, . 77
CAIN & THORPE, Synthetic Dyestuffs, 82
CARTER (H. R.), Long Fibre Spinning, 83
CASTELL-EVANS, Chemical Tables, 79
CHATLEY (H.), Flight, . . . 33
CLARK (J.), Soil Bacteria, . . . 73
CLAYWORKER'S HANDBOOK, . 75
COLE (Prof. G. A. J.), Works by, 52, 85
COLE (W. H.), Light Railways, . . 30
COLLINS, (H. F.), Lead and Silver, . 64
COX (S. H.), Prospecting for Minerals, 53
CUNNINGHAM (B.), Dock Engineering, 27
DAVEY (H.), Pumping Machinery, . 36
DIXON (C.), Bird-Life, . . . 85
DONKIN (Bryan), Works, . . . 28
DUERR (Geo.), Bleaching, &c., . . 84
DUPRÉ & HAKE, Manual of Chemistry, 70
EICHHORN, Wireless Telegraphy, . 49
ENGLISH (T.), Set Squares, . . 46
FARNSWORTH, Cons. Steel Work, . 26
FIDLER (Prof.), Bridge-Construction, 26
FIELD (E. R.), Mining Report Book, . 57
FOSTER (Sir C. Le Neve), Works by, 54
GAIRNS (J. F.), Loco. Compounding, 31
GINSBURG (Dr.), Shipmasters' Duties, 43
GOLDING (H. A.), Bonus Tables, . 31
GROSSMANN (J.), Chem. Engineering, 70
GURDEN (R.), Traverse Tables, . 31
GUTTMANN (O.), Blasting, . . 58
HANNAN (W. I.), Textile Fibres . . 83
HARBORD (F. W.), Steel, . . . 65
HARRISON (J. W.), Sanitation, . . 79
HICKS (J. A.), Mineral Oil Testing, . 61
HOBBS (L.), Engine Design, . . 27
HODGSON (R. B.), Emery Grinding, 32
HUGHES (H. W.), Coal Mining, . 55
HURST (Chas.), Valves and "Hints," 29
HURST (G. H.), Works by, . . . 80
JAMIESON (Prof.), MANUALS, . . 34
JOHNSON (J. C. F.), Getting Gold, . 58
JUDE (A.), Steam Turbine, . . . 28
JULIAN (H. F.) and SMART (E.), Cyaniding Gold and Silver Ores, . 59
KASSNER (T.), Gold Seeking, . . 59
KERR (G. L.), Works by, . . . 55
KNECHT & RAWSON, Dyeing, . . 82
LAFAR, Technical Mycology, . . 74

PAGE
LAMBERT, Glue, Gelatine, &c., . . 81
LARARD (C. E.), Eng. Calculations, . 32
LAWN (J. G.), Mine Accounts, . . 57
LEEDS (F. H.), Acetylene, . . . 77
LIVERSIDGE, Engine-Room Practice, 29
MACKENZIE (T.), Mechanics, . . 42
MACLEOD (W. A.) and WALKER (C.), Metallurgical Chemistry, . 60
McMILLAN (W. G.), Electro-Metallurgy, 67
— & BORCHERS, Electric Smelting, 67
McWILLIAM, Foundry Practice, . 38
MIDDLETON (R. B.), Water Supply, 77
MILL (Dr. R. H.), New Lands, . . 53
MILLAR (W. J.), Latitude & Longitude, 40
MITCHELL (C. A.), Flesh Foods, . 74
— & HEPWORTH (T. C.), Inks, . 81
MORGAN (J. J.), Metallurgical Tables, 66
MUNRO & JAMIESON'S Elect. Pkt-bk., 48
MUNRO (R. D.), Works by, . . 32
NAYLOR (W.), Trades' Waste, . . 76
NICHOLSON (W.), Smoke Abatement, 76
NORTH (S.), Oil Fuel, ... 61
OPPENHEIMER (C.), Works by, . 74
OSMOND & STEAD, Micro. Analysis, 60
PARK, (J.), Works by, . . . 56, 59
PEARCE (W. J.), Painting, . . . 80
PETTIGREW (W. F.), Loco. Eng., . 30
PHILLIPS & BAUERMAN, Metallurgy, 60
POYNTING (Prof.), Mean Density, . 50
— & THOMSON, Physics, . . . 50
PRAEGER (R. L.), Open Air Botany, . 85
RANKINE'S Works, ... 35
RAWSON, GARDNER, & LAYCOCK, Dictionary of Dyestuffs, . . . 82
REDGRAVE (G. R.), Cements, . . 76
REDWOOD (Dr. Boverton), Petroleum, 61
— & THOMSON, Handbook, . . 61
REED (Sir E. J.), Stability of Ships, . 37
REID (Geo., M.D.), Sanitation, . . 78
RICHMOND (H. D.), Works by, . 73
RIEMER (J.), Shaft Sinking, . . 58
ROBERTS-AUSTEN, Metallurgy, . 63
ROBINSON (Prof.), Hydraulics, . . 36
ROSE (T. K.), Gold, Metallurgy of, . 63
ROTHWELL, (C. F. S.), Textile Printing, 83
SCHWACKHÖFER, Fuel and Water, 47
SCHWARTZ (Dr. von), Fire Risks, . 77
SEATON (A. E.), Marine Engineering, 44
— & ROUNTHWAITE, Marine Engineers' Pocket-Book, . . . 44
SEXTON (Prof.), Works by, . 66, 70
SHELTON (W. V.), Mechanic's Guide, 36
SINDALL, Paper Technology, . . 81
SMITH, (J.), Shipmaster's Medical Help, 43
SMITH (Prof. R. H.), Works by, . . 45
SOLOMON (H. G.), Electricity Meters, 49
STRICKLAND (F.), Petrol Motors, . 33
SUPLEE (H. H.), Mech. Pocket Book, 45
SYKES (Dr. W. J.), Brewing, . . 75
TRAILL (T. W.), Boilers, . . . 29
TROTMAN (S. R.), Leather, . . 81
TURNER (Thos.), Works by, . 65, 68
WALTON (T.), Works by, . . . 38
WEBER (Dr. C. O.), India Rubber, . 81
WELLS (S. H.), Engineering Drawing, 27
WIGLEY (T. B.), Jeweller's Art, . 68
WILLOUGHBY (Dr. E. F.), Milk, . 73
WOOD (Francis), Sanitary Engineering, 78
WORDINGHAM, Electrical Stations, . 48
WRIGHT (Dr. A.), Oils and Fats, . 71

Griffin's Standard Publications

		PAGE
Applied Mechanics,	Rankine, Browne, Jamieson,	35, 46, 34
Civil Engineering,	Prof. Rankine,	35
Design of Structures,	S. Anglin,	26
Bridge-Construction,	Prof. Fidler,	26
Design of Beams,	W. H. Atherton,	26
Dock Engineering,	B. Cunningham,	27
Engineering Drawing,	S. H. Wells,	27
Engine Design,	L. Hobbs,	27
Constructional Steelwork,	A. W. Farnsworth,	26
Central Electrical Stations,	C. H. Wordingham,	48
Electricity Control,	L. Andrews,	48
,, **Meters,**	H. G. Solomon,	49
Light Railways,	W. H. Cole,	30
Sanitary Engineering,	F. Wood,	78
Traverse Tables,	R. L. Gurden,	31
Practical Calculations,	C. Labard & H. Golding,	31
Locomotive Engineering,	W. F. Pettigrew,	30
Locomotive Compounding,	J. F. Gairns,	30
Valves and Valve-Gearing,	Chas. Hurst,	29
Marine Engineering,	A. E. Seaton,	44
The Steam Turbine,	Alexander Jude,	28
Marine Steam Turbine,	Prof. Biles,	28
Engine-Room Practice,	J. G. Liversidge,	29
Pocket-Book,	Seaton and Rounthwaite,	44
Present Day Shipbuilding,	T. Walton,	38
Design of Ships,	Prof. Harvard Biles,	38
Steel Vessels,	T. Walton,	38
Stability of Ships,	Sir E. J. Reed,	37
The Steam-Engine,	Rankine, Jamieson,	35, 34
Gas, Oil, and Air-Engines,	Bryan Donkin,	28
Petrol Motors and Cars,	F. Strickland,	33
The Problem of Flight,	H. Chatley,	33
Boilers: Land and Marine,	T. W. Traill,	29
,, **"Steam" & "Kitchen,"**	R. D. Munro,	32
,, **Heat Efficiency of,**	Bryan Donkin,	28
Oil Fuel,	Sidney H. North,	61
Machinery and Millwork,	Prof. Rankine,	35
Pumping Machinery,	H. Davey,	36
Hydraulic Machinery,	Prof. Robinson,	36
Grinding Machinery,	R. B. Hodgson,	32
Lubrication and Lubricants,	Archbutt & Deeley,	32
Rules and Tables,	Rankine and Jamieson,	35
Bonus Tables,	H. A. Golding,	31
Electrical Pocket-Book,	Munro and Jamieson,	48
The Calculus for Engineers,	Prof. Robt. H. Smith,	45
Measurement Conversions,	Prof. Robt. H. Smith,	45

LONDON: CHARLES GRIFFIN & CO., LIMITED, EXETER STREET, STRAND.

FOURTH EDITION, *Revised, with Numerous Diagrams, Examples, and Tables, and a Chapter on Foundations. In Large 8vo. Cloth.* 16s.

THE DESIGN OF STRUCTURES:

A Practical Treatise on the Building of Bridges, Roofs, &c.

BY S. ANGLIN, C.E.,

Master of Engineering, Royal University of Ireland, late Whitworth Scholar, &c.

"We can unhesitatingly recommend this work not only to the Student, as the BEST TEXT-BOOK on the subject, but also to the professional engineer as an EXCEEDINGLY VALUABLE book of reference."—*Mechanical World.*

In Large Crown 8vo. Handsome Cloth. With 201 Illustrations. 6s. net.

AN INTRODUCTION TO

THE DESIGN OF BEAMS, GIRDERS, AND COLUMNS

IN MACHINES AND STRUCTURES.

With Examples in Graphic Statics.

BY WILLIAM H. ATHERTON, M.Sc., M.I.MECH.E.

"A very useful source of information. . . . A work which we commend very highly."—*Nature.*

THIRD EDITION, *Thoroughly Revised. Royal 8vo. With numerous Illustrations and 13 Lithographic Plates. Handsome Cloth. Price* 30s.

A PRACTICAL TREATISE ON

BRIDGE-CONSTRUCTION:

Being a Text-Book on the Construction of Bridges in Iron and Steel.

FOR THE USE OF STUDENTS, DRAUGHTSMEN, AND ENGINEERS.

BY T. CLAXTON FIDLER, M. INST. C.E.,

Prof. of Engineering, University College, Dundee.

"The new edition of Mr. Fidler's work will again occupy the same CONSPICUOUS POSITION among professional text-books and treatises as has been accorded to its predecessors. SOUND, SIMPLE, AND FULL."—*The Engineer.*

In Medium 8vo. Pp. i-xv + 248, fully Illustrated. Price 10s. 6d. *net.*

CONSTRUCTIONAL STEELWORK:

Being Notes on the Practical Aspect and the Principles of Design, together with an Account of the Present Methods and Tools of Manufacture.

BY A. W. FARNSWORTH,

Associate Member of the Institute of Mechanical Engineers.

"A worthy volume, which will be found of much assistance. . . . A book of particular value."—*Practical Engineer.*

In Large 8vo. Handsome Cloth, Gilt, Uniform with *Stability of Ships* and *Steel Ships* (p. 38). With 34 Folding Plates and 468 Illustrations in the Text. 30s. net.

The Principles and Practice of
DOCK ENGINEERING.

By BRYSSON CUNNINGHAM, B.E., Assoc.M.Inst.C.E.,
Of the Engineers' Department, Mersey Docks and Harbour Board.

GENERAL CONTENTS.

Historical and Discursive.—Dock Design.—Constructive Appliances.—Materials.—Dock and Quay Walls.—Entrance Passages and Locks.—Jetties, Wharves, and Piers.—Dock Gates and Caissons.—Transit Sheds and Warehouses.—Dock Bridges.—Graving and Repairing Docks.—Working Equipment of Docks.—Index.

"We have never seen a more profusely-illustrated treatise. It is a most important standard work, and should be in the hands of all dock and harbour engineers."—*Steamship.*
"Will be of the greatest service to the expert as a book of reference."—*Engineer.*

Fourth Edition. In Two Parts, Published Separately.

A TEXT-BOOK OF
Engineering Drawing and Design.

BY
SIDNEY H. WELLS, Wh.Sc., A.M.I.C.E., A.M.I.Mech.E.

Vol. I.—Practical Geometry, Plane, and Solid. 4s. 6d.
Vol. II.—Machine and Engine Drawing and Design. 4s. 6d.

With many Illustrations, specially prepared for the Work, and numerous Examples, for the Use of Students in Technical Schools and Colleges.

"A capital text-book, arranged on an excellent system, calculated to give an intelligent grasp of the subject, and not the mere faculty of mechanical copying. . . . Mr. Wells shows how to make complete working-drawings, discussing fully each step in the design."—*Electrical Review*

In Large Crown 8vo. Handsome Cloth. 4s. 6d. net.

THE THERMO-DYNAMIC PRINCIPLES OF ENGINE DESIGN.

By LIONEL M. HOBBS,
Engineer-Lieutenant, R.N.; Instructor in Applied Mechanics and Marine Engine Design at the Royal Naval College, Greenwich.

Contents. — Laws and Principles of Thermo-Dynamics. — Hot-Air Engines.—Gas and Oil Engines.—Refrigerating Machines.—Transmission of Power by Compressed Air.—The Steam Engine.—Unresisted Expansion and Flow through Orifices.—Flow of Gases along Pipes.—Steam Injectors and Ejectors.—Steam Turbines.—Appendices.—Index.

"The whole subject has been very methodically dealt with throughout. . . . A standard reference."—*Practical Engineer.*

LONDON: CHARLES GRIFFIN & CO., LIMITED, EXETER STREET, STRAND.

In Handsome Cloth. With 252 Illustrations. 15s. net.

THE THEORY OF THE STEAM TURBINE.

A Treatise on the Principles of Construction of the Steam Turbine, with Historical Notes on its Development.

BY ALEXANDER JUDE.

CONTENTS.—Fundamental.—Historical Notes on Turbines.—The Velocity of Steam.—Types of Steam Turbines.—Practical Turbines.—The Efficiency of Turbines, Type I.—Trajectory of the Steam.—Efficiency of Turbines, Types II., III. and IV.—Turbine Vanes.—Disc and Vane Friction in Turbines.—Specific Heat of Superheated Steam.—Strength of Rotating Discs.—Governing Steam Turbines.—Steam Consumption of Turbines.—The Whirling of Shafts.—Speed of Turbines.—INDEX.

"One of the latest text-books . . . also one of the best . . . there is absolutely no padding."—*Sir William White* in the *Times* Engineering Supplement.

In Large Crown 8vo. Handsome Cloth. With 131 Illustrations. 6s. net.

LECTURES ON THE MARINE STEAM TURBINE.

BY PROF. J. HARVARD BILES, M.INST.N.A.,

Professor of Naval Architecture in the University of Glasgow.

"This is the best popular work on the marine steam turbine which has yet appeared."—*Steamship.*

Works by BRYAN DONKIN, M.Inst.C.E., M.Inst.Mech.E., &c.

FOURTH EDITION, Revised and Enlarged. With additional Illustrations. Large 8vo, Handsome Cloth. 25s. net.

A TREATISE ON

GAS, OIL, AND AIR ENGINES.

BY BRYAN DONKIN, M.INST.C.E., M.INST.MECH.E.

CONTENTS.—PART I.—**Gas Engines:** General Description of Action and Parts.—Heat Cycles and Classification of Gas Engines.—History of the Gas Engine.—The Atkinson, Griffin, and Stockport Engines.—The Otto Gas Engine.—Modern British Gas Engines.—Modern French Gas Engines.—German Gas Engines.—Gas Production for Motive Power.—Utilisation of Blast-furnace and Coke-oven Gases for Power.—The Theory of the Gas Engine.—Chemical Composition of Gas in an Engine Cylinder.—Utilisation of Heat in a Gas Engine.—Explosion and Combustion in a Gas Engine.—PART II.—**Petroleum Engines:** The Discovery, Utilisation, and Properties of Oil.—Method of Treating Oil.—Carburators.—Early Oil Engines.—Practical Application of Gas and Oil Engines.—PART III.—**Air Engines.**—APPENDICES.—INDEX.

"The best book now published on Gas, Oil, and Air Engines."—*Engineer.*

In Quarto, Handsome Cloth. With Numerous Plates. 25s.

THE HEAT EFFICIENCY OF STEAM BOILERS

(LAND, MARINE, AND LOCOMOTIVE).

BY BRYAN DONKIN, M.INST.C.E.

GENERAL CONTENTS.—Classification of Different Types of Boilers.—425 Experiments on English and Foreign Boilers with their Heat Efficiencies shown in Fifty Tables.—Fire Grates of Various Types.—Mechanical Stokers.—Combustion of Fuel in Boilers.—Transmission of Heat through Boiler Plates, and their Temperature.—Feed Water Heaters, Superheaters, Feed Pumps, &c.—Smoke and its Prevention.—Instruments used in Testing Boilers.—Marine and Locomotive Boilers.—Fuel Testing Stations.—Discussion of the Trials and Conclusions.—On the Choice of a Boiler, and Testing of Land, Marine, and Locomotive Boilers.—Appendices.—Bibliography.—INDEX.

"Probably the MOST EXHAUSTIVE *resumé* that has ever been collected. A PRACTICAL BOOK by a thoroughly practical man."—*Iron and Coal Trades Review.*

FOURTH EDITION, Revised. Pocket-Size, Leather, 12s. 6d.

BOILERS, MARINE AND LAND:

THEIR CONSTRUCTION AND STRENGTH.

A HANDBOOK OF RULES, FORMULÆ, TABLES, &c., RELATIVE TO MATERIAL, SCANTLINGS, AND PRESSURES, SAFETY VALVES, SPRINGS, FITTINGS AND MOUNTINGS, &c.

FOR THE USE OF ENGINEERS, SURVEYORS, BOILER-MAKERS, AND STEAM USERS.

BY T. W. TRAILL, M. INST. C. E., F. E. R. N.,

Late Engineer Surveyor-in-Chief to the Board of Trade.

"Contains an ENORMOUS QUANTITY OF INFORMATION arranged in a very convenient form. . . . A MOST USEFUL VOLUME . . . supplying information to be had nowhere else."—*The Engineer.*

FIFTH EDITION. Large Crown 8vo. With numerous Illustrations. 6s. net.

ENGINE-ROOM PRACTICE:

A Handbook for Engineers and Officers in the Royal Navy and Mercantile Marine, including the Management of the Main and Auxiliary Engines on Board Ship.

BY JOHN G. LIVERSIDGE, R.N., A.M.I.C.E.

Contents.—General Description of Marine Machinery.—The Conditions of Service and Duties of Engineers of the Royal Navy.—Entry and Conditions of Service of Engineers of the Leading S.S. Companies.—Raising Steam.—Duties of a Steaming Watch on Engines and Boilers.—Shutting off Steam.—Harbour Duties and Watches.—Adjustments and Repairs of Engines.—Preservation and Repairs of "Tank" Boilers.—The Hull and its Fittings.—Cleaning and Painting Machinery.—Reciprocating Pumps, Feed Heaters, and Automatic Feed-Water Regulators.—Evaporators.—Steam Boats.—Electric Light Machinery.—Hydraulic Machinery.—Air-Compressing Pumps.—Refrigerating Machines.—Machinery of Destroyers.—The Management of Water-Tube Boilers.—Regulations for Entry of Assistant Engineers, R.N.—Questions given in Examinations for Promotion of Engineers, R.N.—Regulations respecting Board of Trade Examinations for Engineers, &c.

"This VERY USEFUL BOOK. . . . ILLUSTRATIONS are of GREAT IMPORTANCE in a work of this kind, and it is satisfactory to find that SPECIAL ATTENTION has been given in this respect."—*Engineers' Gazette.*

FOURTH EDITION, Thoroughly Revised and Greatly Enlarged. With Numerous Illustrations. Price 10s. 6d.

VALVES AND VALVE-GEARING:

A Practical Text-book for the use of Engineers, Draughtsmen, and Students.

BY CHARLES HURST, PRACTICAL DRAUGHTSMAN.

PART I.—Steam Engine Valves.
PART II.—Gas Engine Valves and Gears.
PART III.—Air Compressor Valves and Gearing.
PART IV.—Pump Valves.

"MR. HURST'S VALVES and VALVE-GEARING will prove a very valuable aid, and tend to the production of Engines of SCIENTIFIC DESIGN and ECONOMICAL WORKING. . . . Will be largely sought after by Students and Designers."—*Marine Engineer.*

"As a practical treatise on the subject, the book stands without a rival."—*Mechanical World.*

Hints on Steam Engine Design and Construction. By CHARLES HURST, "Author of Valves and Valve Gearing." SECOND EDITION, Revised. In Paper Boards, 8vo., Cloth Back. Illustrated. Price 1s. 6d. net.

CONTENTS.—I. Steam Pipes.—II. Valves.—III. Cylinders.—IV. Air Pumps and Condensers.—V. Motion Work.—VI. Crank Shafts and Pedestals.—VII. Valve Gear.—VIII. Lubrication.—IX. Miscellaneous Details.—INDEX.

"A handy volume which every practical young engineer should possess."—*The Model Engineer.*

LONDON: CHARLES GRIFFIN & CO., LIMITED, EXETER STREET, STRAND.

SECOND EDITION, Revised. With numerous Plates reduced from Working Drawings and 280 Illustrations in the Text. 21s.

A MANUAL OF
LOCOMOTIVE ENGINEERING:

A Practical Text-Book for the Use of Engine Builders, Designers and Draughtsmen, Railway Engineers, and Students.

BY WILLIAM FRANK PETTIGREW, M.INST.C.E.

With a Section on American and Continental Engines.

BY ALBERT F. RAVENSHEAR, B.Sc.,

Of His Majesty's Patent Office.

Contents.—Historical Introduction, 1763-1863.—Modern Locomotives: Simple.—Modern Locomotives: Compound.—Primary Consideration in Locomotive Design.—Cylinders, Steam Chests, and Stuffing Boxes.—Pistons, Piston Rods, Crossheads, and Slide Bars.—Connecting and Coupling Rods.—Wheels and Axles, Axle Boxes, Hornblocks, and Bearing Springs.—Balancing.—Valve Gear.—Slide Valves and Valve Gear Details.—Framing, Bogies and Axle Trucks, Radial Axle Boxes.—Boilers.—Smokebox, Blast Pipe, Firebox Fittings.—Boiler Mountings.—Tenders.—Railway Brakes.—Lubrication.—Consumption of Fuel, Evaporation and Engine Efficiency.—American Locomotives.—Continental Locomotives.—Repairs, Running, Inspection, and Renewals.—Three Appendices.—Index.

"The work CONTAINS ALL THAT CAN BE LEARNT from a book upon such a subject. It will at once rank as THE STANDARD WORK UPON THIS IMPORTANT SUBJECT."—*Railway Magazine.*

In Large 8vo. Fully Illustrated. 8s. 6d. net.

LOCOMOTIVE COMPOUNDING AND SUPERHEATING.

BY J. F. GAIRNS.

CONTENTS.—Introductory.—Compounding and Superheating for Locomotives.—A Classification of Compound Systems for Locomotives.—The History and Development of the Compound Locomotive.—Two-Cylinder Non-Automatic Systems.—Two-Cylinder Automatic Systems.—Other Two-Cylinder Systems.—Three-Cylinder Systems.—Four-Cylinder Tandem Systems.—Four-Cylinder Two-Crank Systems (other than Tandem).—Four-Cylinder Balanced Systems.—Four-Cylinder Divided and Balanced Systems.—Articulated Compound Engines.—Triple-Expansion Locomotives.—Compound Rack Locomotives.—Concluding Remarks Concerning Compound Locomotives.—The Use of Superheated Steam for Locomotives.—INDEX.

"A welcome addition to the library of the railway engineer."—*Engineering Times.*

In Large 8vo. Handsome Cloth. With Plates and Illustrations. 16s.

LIGHT RAILWAYS

AT HOME AND ABROAD.

BY WILLIAM HENRY COLE, M.INST.C.E.,

Late Deputy-Manager, North-Western Railway, India.

Contents.—Discussion of the Term "Light Railways."—English Railways, Rates, and Farmers.—Light Railways in Belgium, France, Italy, other European Countries, America and the Colonies, India, Ireland.—Road Transport as an alternative.—The Light Railways Act, 1896.—The Question of Gauge.—Construction and Working.—Locomotives and Rolling-Stock.—Light Railways in England, Scotland, and Wales.—Appendices and Index.

"Will remain, for some time yet, a STANDARD WORK in everything relating to Light Railways."—*Engineer.*

"The whole subject is EXHAUSTIVELY and PRACTICALLY considered. The work can be cordially recommended as INDISPENSABLE to those whose duty it is to become acquainted with one of the prime necessities of the immediate future."—*Railway Official Gazette.*

In Crown 8vo. Handsome Cloth. Fully Illustrated.

PRACTICAL CALCULATIONS FOR ENGINEERS.

BY CHARLES E. LARARD,

A.M.Inst.C.E., M.I.Mech.E., Wh.Exh.,

Head of the Mechanical Engineering Department at the Northampton Institute, London, E.C.

AND H. A. GOLDING, A.M.Inst.C.E.

CONTENTS.—SECTION I.—Contracted Methods of Calculation.—Technical Mensuration.—Practical Calculation by Logarithms.—The Slide Rule and its Applications.—Squared Paper and its Uses. SECTION II.—Pulleys and Wheels in Train.—Speed Ratios and Practical Examples.—Principle of Moments Applied to Practical Problems.—Work and Power.—Energy and Speed Fluctuations.—Transmission of Work through Machines.—Friction and Efficiency.—Transmission of Power.—Shafting.—Motion on a Circle.—Momentum, Acceleration, and Force Action. SECTION III.—Temperature Scales.—Units of Heat.—Specific Heat.—Heat and Work.—Heat Value of Fuels.—Heat Losses in Engine and Boiler Plant.—Properties of Steam.—Moisture and Dryness Fraction.—Steam and Fuel Calculations.—Boiler Efficiency.—Size of Boiler.—Engine Calculations.—Power, Indicated and Brake.—Calculations for Dimensions.—Steam Consumption and Willans Law.—Efficiencies, Comparative Costs of Power Production.—Commercial Efficiency. SECTION IV.—The Commercial side of Engineering.—Calculation of Weights.—Division of Costs, Material and Labour, Shop Charges and Establishment Charges.—Estimates.—Profit.—Use of Squared Paper in the Estimating Department and to the General Management.

SIXTH EDITION. Folio, strongly half-bound, 21s.

TRAVERSE TABLES:

Computed to Four Places of Decimals for every Minute of Angle up to 100 of Distance.

For the Use of Surveyors and Engineers.

BY RICHARD LLOYD GURDEN,

Authorised Surveyor for the Governments of New South Wales and Victoria.

*** *Published with the Concurrence of the Surveyors-General for New South Wales and Victoria.*

"Those who have experience in exact SURVEY-WORK will best know how to appreciate the enormous amount of labour represented by this valuable book. The computations enable the user to ascertain the sines and cosines for a distance of twelve miles to within half an inch, and this BY REFERENCE TO BUT ONE TABLE, in place of the usual Fifteen minute computations required. This alone is evidence of the assistance which the Tables ensure to every user, and as every Surveyor in active practice has felt the want of such assistance FEW KNOWING OF THEIR PUBLICATION WILL REMAIN WITHOUT THEM."
—*Engineer.*

Strongly Bound in Super Royal 8vo. Cloth Boards. 7s. 6d. net.

BONUS TABLES:

For Calculating Wages on the Bonus or Premium Systems.

For Engineering, Technical and Allied Trades.

BY HENRY A. GOLDING, A.M.INST.M.E.,

Technical Assistant to Messrs. Bryan Donkin and Clench, Ltd., and Assistant Lecturer in Mechanical Engineering at the Northampton Institute, London, E.C.

"Cannot fail to prove practically serviceable to those for whom they have been designed."—*Scotsman.*

LONDON: CHARLES GRIFFIN & CO., LIMITED EXETER STREET, STRAND.

SECOND EDITION. Large 8vo, Handsome Cloth. With Illustrations, Tables, &c. 21s. net.

Lubrication & Lubricants:

A Treatise on the Theory and Practice of Lubrication, and on the Nature, Properties, and Testing of Lubricants.

BY

LEONARD ARCHBUTT, F.I.C., F.C.S.,
Chemist to the Mid. Ry. Co.

AND

R. M. DEELEY, M.I.Mech.E., F.G.S.,
Chief Loco. Super., Mid. Ry. Co.

CONTENTS.—I. Friction of Solids.—II. Liquid Friction or Viscosity, and Plastic Friction.—III. Superficial Tension.—IV. The Theory of Lubrication.—V. Lubricants, their Sources, Preparation, and Properties.—VI. Physical Properties and Methods of Examination of Lubricants.—VII. Chemical Properties and Methods of Examination of Lubricants.—VIII. The Systematic Testing of Lubricants by Physical and Chemical Methods.—IX. The Mechanical Testing of Lubricants.—X. The Design and Lubrication of Bearings.—XI. The Lubrication of Machinery.—INDEX.

"Contains practically ALL THAT IS KNOWN on the subject. Deserves the careful attention of all Engineers."—*Railway Official Gazette.*

FOURTH EDITION. *Very fully Illustrated. Cloth,* 4s. 6d.

STEAM - BOILERS:

THEIR DEFECTS, MANAGEMENT, AND CONSTRUCTION.

BY R. D. MUNRO,

Chief Engineer of the Scottish Boiler Insurance and Engine Inspection Company.

GENERAL CONTENTS.—I. EXPLOSIONS caused (1) by Overheating of Plates—(2) By Defective and Overloaded Safety Valves—(3) By Corrosion, Internal or External—(4) By Defective Design and Construction (Unsupported Flue Tubes; Unstrengthened Manholes; Defective Staying; Strength of Rivetted Joints; Factor of Safety)—II. CONSTRUCTION OF VERTICAL BOILERS: Shells—Crown Plates and Uptake Tubes—Man-Holes, Mud-Holes, and Fire-Holes—Fireboxes—Mountings—Management—Cleaning—Table of Bursting Pressures of Steel Boilers—Table of Rivetted Joints—Specifications and Drawings of Lancashire Boiler for Working Pressures (*a*) 80 lbs.; (*b*) 200 lbs. per square inch respectively.

"A valuable companion for workmen and engineers engaged about Steam Boilers, ought to be carefully studied, and ALWAYS AT HAND."—*Coll. Guardian.*

BY THE SAME AUTHOR.

KITCHEN BOILER EXPLOSIONS: Why

they Occur, and How to Prevent their Occurrence. A Practical Handbook based on Actual Experiment. With Diagram and Coloured Plate. 3s.

In Crown 8vo, Cloth. Fully Illustrated. 5s. *net.*

EMERY GRINDING MACHINERY.

A Text-Book of Workshop Practice in General Tool Grinding, and the Design, Construction, and Application of the Machines Employed.

BY R. B. HODGSON, A.M.INST.MECH.E.

INTRODUCTION.—Tool Grinding.—Emery Wheels.—Mounting Emery Wheels.—Emery Rings and Cylinders.—Conditions to Ensure Efficient Working.—Leading Types of Machines.—Concave and Convex Grinding.—Cup and Cone Machines.—Multiple Grinding.—"Guest" Universal and Cutter Grinding Machines.—Ward Universal Cutter Grinder.—Press.—Tool Grinding.—Lathe Centre Grinder.—Polishing.—INDEX.

"Eminently practical . . . cannot fail to attract the notice of the users of this class of machinery, and to meet with careful perusal."—*Chem. Trade Journal.*

IN THREE PARTS. Crown 8vo, Handsome Cloth. Very Fully Illustrated.

MOTOR-CAR MECHANISM AND MANAGEMENT.

BY W. POYNTER ADAMS, M.INST.E.E.

IN THREE PARTS.

Part I.—The Petrol Car. Part II.—The Electrical Car. Part III.—The Steam Car.

PART I.—THE PETROL CAR. 5s. net.

SECOND EDITION. With important new Appendix, illustrating and defining parts of actual cars in use.

Contents.—SECTION I.—THE MECHANISM OF THE PETROL CAR.—The Engine.—The Engine Accessories.—Electrical Ignition and Accessories.—Multiple Cylinder Engines.—The Petrol.—The Chassis and Driving Gear.—SECTION II.—THE MANAGEMENT OF THE PETROL CAR—The Engine.—The Engine Accessories.—Electrical Ignition.—The Chassis and Driving Gear.—General Management.—APPENDIX.—GLOSSARY.—INDEX.

"Should be carefully studied by those who have anything to do with motors."—*Automobile and Carriage Builders' Journal.*

In Large 8vo. Handsome Cloth. Very Fully Illustrated. 18s. net.

A MANUAL OF PETROL MOTORS AND MOTOR-CARS.

Comprising the Designing, Construction, and Working of Petrol Motors.

By F. STRICKLAND.

GENERAL CONTENTS.—PART I.: ENGINES.—Historical.—Power Required.—General Arrangement of Engines.—Ignition.—Carburettors.—Cylinders, Pistons, Valves, &c.—Crank Shafts, Crank Chambers, Cams, Runners, Guides, &c.—Pumps.—Flywheels.—Pipe Arrangements.—Silencers.—Engine Control, Balancing.—Motor Cycle Engines.—Marine Motors.—Two-Cycle Motors.—Paraffin Carburettors.—Gas Producers. PART II.: CARS.—General Arrangements—Clutches.—Transmission.—Differential Gears.—Universal Joints.—Axles.—Springs.—Radius Rods.—Brakes.—Wheels.—Frames.—Steering Gear.—Radiator.—Steps, Mudguards, Bonnets, &c.—Lubrication.—Ball Bearings.—Bodies.—Factors of Safety.—Calculations of Stresses.—Special Change Speed Gears.—Special Cars.—Commercial Vehicles.—Racing Cars.—INDEX.

READY IMMEDIATELY. In Large 8vo, Handsome Cloth. Very Fully Illustrated by Plates and Diagrams.

THE PROBLEM OF FLIGHT.

BY HERBERT CHATLEY, B.SC.(ENG.), LONDON,

Lecturer in Applied Mechanics Portsmouth Technical Institute.

CONTENTS.—The Problem of Flight.—The Helix.—The Aëroplane.—The Aviplane.—Dirigible Balloons.—Form and Fittings of the Airship.—APPENDICES (*The Possibility of Flight, Weight, A Flexible Wing, Theory of Balance, Bibliography*).—INDEX.

LONDON: CHARLES GRIFFIN & CO., LIMITED, EXETER STREET, STRAND.

WORKS BY
ANDREW JAMIESON, M.INST.C.E., M.I.E.E., F.R.S.E.,
Formerly Professor of Electrical Engineering, The Glas. and W. of Scot. Tech. Coll.

PROFESSOR JAMIESON'S ADVANCED TEXT-BOOKS.
In Large Crown 8vo. Fully Illustrated.

STEAM AND STEAM-ENGINES, INCLUDING TURBINES AND BOILERS. For the Use of Engineers and for Students preparing for Examinations. With 800 pp., over 400 Illustrations, 11 Plates, many B. of E., C. and G., Questions and Answers, and all Inst. C.E. Exams. on *Theory of Heat Engines.* FIFTEENTH EDITION, Revised. 10s. 6d.

"The BEST BOOK yet published for the use of Students."—*Engineer.*

APPLIED MECHANICS & MECHANICAL ENGINEERING. *Including All the Inst. C.E. Exams.* in (1) Applied Mechanics; (2) Strength and Elasticity of Materials; (3a) Theory of Structures; (ii) Theory of Machines; Hydraulics. Also B. of E.; C. and G. Questions.

Vol. I.—Comprising 568 pages, 300 Illustrations, and Questions: Part I., The Principle of Work and its Applications; Part II.: Friction, Lubrication of Bearings, &c.; Different kinds of Gearing and their Applications to Workshop Tools, &c. FIFTH EDITION. 8s. 6d.

"FULLY MAINTAINS the reputation of the Author."—*Pract. Engineer.*

Vol. II.—Comprising Parts III. to VI., with over 800 pages, 371 Illustrations; Motion and Energy, Theory of Structures or Graphic Statics; Strength and Elasticity of Materials; Hydraulics and Hydraulic Machinery. FIFTH EDITION. 12s. 6d.

"WELL AND LUCIDLY WRITTEN."—*The Engineer.*

*** *Each of the above volumes is complete in itself, and sold separately.*

PROFESSOR JAMIESON'S INTRODUCTORY MANUALS
Crown 8vo. With Illustrations and Examination Papers.

STEAM AND THE STEAM-ENGINE (Elementary Manual of). For First-Year Students, forming an Introduction to the Author's larger Work. ELEVENTH EDITION, Revised and Enlarged. 3/6.

"Should be in the hands of EVERY engineering apprentice."—*Practical Engineer.*

MAGNETISM AND ELECTRICITY (Practical Elementary Manual of). For First-Year Students. With Stud. Inst. C.E. and B. of E. Exam. Questions. SEVENTH EDITION, Revised and Enlarged. 3/6.

"A THOROUGHLY TRUSTWORTHY Text-book. PRACTICAL and clear."—*Nature.*

APPLIED MECHANICS (Elementary Manual of). For First-Year Students. With B. of E., C. and G.; and Stud. Inst. C.E. Questions. SEVENTH EDITION, Revised and Greatly Enlarged. 3/6.

"The work has VERY HIGH QUALITIES, which may be condensed into the one word 'CLEAR.'"—*Science and Art.*

A POCKET-BOOK of ELECTRICAL RULES and TABLES. For the Use of Electricians and Engineers. By JOHN MUNRO, C.E., and Prof. JAMIESON. Pocket Size. Leather, 8s. 6d. EIGHTEENTH EDITION. [See p. 48 *General Catalogue.*

WORKS BY W. J. MACQUORN RANKINE, LL.D., F.R.S.

Thoroughly Revised by W. J. MILLAR, C.E.

A MANUAL OF APPLIED MECHANICS: Comprising the Principles of Statics and Cinematics, and Theory of Structures, Mechanism, and Machines. With Numerous Diagrams. Crown 8vo, Cloth. SEVENTEENTH EDITION. 12s. 6d.

A MANUAL OF CIVIL ENGINEERING: Comprising Engineering Surveys, Earthwork, Foundations, Masonry, Carpentry, Metal Work, Roads, Railways, Canals, Rivers, Waterworks, Harbours, &c. With Numerous Tables and Illustrations. Crown 8vo, Cloth. TWENTY-THIRD EDITION. 16s.

A MANUAL OF MACHINERY AND MILLWORK: Comprising the Geometry, Motions, Work, Strength, Construction, and Objects of Machines, &c. With nearly 300 Illustrations. Crown 8vo, Cloth. SEVENTH EDITION. 12s. 6d.

A MANUAL OF THE STEAM-ENGINE AND OTHER PRIME MOVERS. With a Section on GAS, OIL, and AIR ENGINES, by BRYAN DONKIN, M.Inst.C.E. With Folding Plates and Numerous Illustrations. Crown 8vo, Cloth. SIXTEENTH EDITION 12s. 6d.

USEFUL RULES AND TABLES: For Architects, Builders, Engineers, Founders, Mechanics, Shipbuilders, Surveyors, &c. With APPENDIX for the use of ELECTRICAL ENGINEERS. By Professor JAMIESON, M.Inst.C.E., M.I.E.E. SEVENTH EDITION. 10s. 6d.

A MECHANICAL TEXT-BOOK: A Practical and Simple Introduction to the Study of Mechanics. By Professor RANKINE and E. F. BAMBER, C.E. With Numerous Illustrations. Crown 8vo, Cloth. FIFTH EDITION. 9s.

**** The "MECHANICAL TEXT-BOOK" was designed by* Professor RANKINE *as an* INTRODUCTION *to the above Series of Manuals.*

MISCELLANEOUS SCIENTIFIC PAPERS. Part I. Temperature, Elasticity, and Expansion of Vapours, Liquids, and Solids. Part II. Energy and its Transformations. Part III. Wave-Forms, Propulsion of Vessels, &c. With Memoir by Professor TAIT, M.A. With fine Portrait on Steel, Plates, and Diagrams. Royal 8vo. Cloth. 31s. 6d.

"No more enduring Memorial of Professor Rankine could be devised than the publication of these papers in an accessible form. . . . The Collection is most valuable on account of the nature of his discoveries, and the beauty and completeness of his analysis." —*Architect.*

THIRD EDITION, *Thoroughly Revised and Enlarged. With 60 Plates and Numerous Illustrations. Handsome Cloth. 34s.*

HYDRAULIC POWER

AND

HYDRAULIC MACHINERY.

BY

HENRY ROBINSON, M. INST. C.E., F.G.S.,

FELLOW OF KING'S COLLEGE, LONDON; PROF. EMERITUS OF CIVIL ENGINEERING, KING'S COLLEGE, ETC., ETC.

CONTENTS —Discharge through Orifices.—Flow of Water through Pipes.—Accumulators.—Presses and Lifts.—Hoists.—Rams.—Hydraulic Engines.—Pumping Engines.—Capstans.—Traversers.—Jacks.—Weighing Machines.—Riveters and Shop Tools.—Punching, Shearing, and Flanging Machines.—Cranes.—Coal Discharging Machines.—Drills and Cutters.—Pile Drivers, Excavators, &c.—Hydraulic Machinery applied to Bridges, Dock Gates, Wheels and Turbines.—Shields.—Various Systems and Power Installations—Meters, &c.—INDEX.

"The standard work on the application of water power."—*Cassier's Magazine.*

Second Edition, Greatly Enlarged. With Frontispiece, several Plates, and over 250 Illustrations. 21s. net.

THE PRINCIPLES AND CONSTRUCTION OF

PUMPING MACHINERY

(STEAM AND WATER PRESSURE).

With Practical Illustrations of ENGINES and PUMPS applied to MINING, TOWN WATER SUPPLY, DRAINAGE of Lands, &c., also Economy and Efficiency Trials of Pumping Machinery.

BY HENRY DAVEY,

Member of the Institution of Civil Engineers, Member of the Institution of Mechanical Engineers, F.G.S., &c.

CONTENTS —Early History of Pumping Engines—Steam Pumping Engines—Pumps and Pump Valves—General Principles of Non-Rotative Pumping Engines—The Cornish Engine, Simple and Compound—Types of Mining Engines—Pit Work—Shaft Sinking—Hydraulic Transmission of Power in Mines—Electric Transmission of Power—Valve Gears of Pumping Engines—Water Pressure Pumping Engines—Water Works Engines—Pumping Engine Economy and Trials of Pumping Machinery—Centrifugal and other Low-Lift Pumps—Hydraulic Rams, Pumping Mains, &c.—INDEX.

"By the 'one English Engineer who probably knows more about Pumping Machinery than ANY OTHER.' . . . A VOLUME RECORDING THE RESULTS OF LONG EXPERIENCE AND STUDY."—*The Engineer.*

"Undoubtedly THE BEST AND MOST PRACTICAL TREATISE on Pumping Machinery THAT HAS YET BEEN PUBLISHED."—*Mining Journal.*

AT PRESS. In Large 8vo. Handsome Cloth. Profusely Illustrated.
IN TWO VOLUMES, Each Complete in itself, and
SOLD SEPARATELY.

THE DESIGN

AND

CONSTRUCTION OF SHIPS.

BY JOHN HARVARD BILES, M.INST.N.A.,

Professor of Naval Architecture in Glasgow University.

CONTENTS OF VOLUME I.—PART I.: General Considerations.—Methods of Determination of the Volume and Centre of Gravity of a known Solid.—Graphic Rules for Integration.—Volumes and Centre of Gravity of Volumes.—Delineation and Descriptive Geometry of a Ship's Form.—Description and Instances of Ship's Forms.—Description of Types of Ships. PART II.: Calculation of Displacement, Centre of Buoyancy and Areas.—Metacentres.—Trim.—Coefficients and Standardising.—Results of Ship Calculations.—Instruments Used to Determine Areas, Moments, and Moments of Inertia of Plane Curves.—Cargo Capacities.—Effects on Draught, Trim, and Initial Stability due to Flooding Compartments.—Tonnage.—Freeboard.—Launching.—Application of the Integraph to Ship Calculations.—Straining due to Unequal Longitudinal Distribution of Weight and Buoyancy.—Consideration of Stresses in a Girder.—Application of Stress Formulæ to the Section of a Ship.—Shearing Forces and Bending Moments on a Ship amongst Waves.—Stresses on the Structure when Inclined to the Upright or to the Line of Advance of the Waves.—Distribution of Pressure on the Keel Blocks of a Vessel in Dry Dock.—Consideration of Compression in Ship Structure.

BY PROFESSOR BILES.

LECTURES ON THE MARINE STEAM TURBINE.

With 131 Illustrations. Price 6s. net.

See page 28.

Royal 8vo, Handsome Cloth. With numerous Illustrations and Tables. 25s.

THE STABILITY OF SHIPS.

BY

SIR EDWARD J. REED, K.C.B., F.R.S., M.P.,

KNIGHT OF THE IMPERIAL ORDERS OF ST. STANILAUS OF RUSSIA; FRANCIS JOSEPH OF AUSTRIA; MEDJIDIE OF TURKEY; AND RISING SUN OF JAPAN; VICE-PRESIDENT OF THE INSTITUTION OF NAVAL ARCHITECTS.

"Sir EDWARD REED'S 'STABILITY OF SHIPS' is INVALUABLE. The NAVAL ARCHITECT will find brought together and ready to his hand, a mass of information which he would otherwise have to seek in an almost endless variety of publications, and some of which he would possibly not be able to obtain at all elsewhere."—*Steamship.*

LONDON: CHARLES GRIFFIN & CO., LIMITED, EXETER STREET, STRAND

WORKS BY THOMAS WALTON,
NAVAL ARCHITECT.

THIRD EDITION. Illustrated with Plates, Numerous Diagrams, and Figures in the Text. 18s. net.

STEEL SHIPS:
THEIR CONSTRUCTION AND MAINTENANCE.

A Manual for Shipbuilders, Ship Superintendents, Students, and Marine Engineers.

BY THOMAS WALTON, NAVAL ARCHITECT,
AUTHOR OF "KNOW YOUR OWN SHIP."

CONTENTS.—I. Manufacture of Cast Iron, Wrought Iron, and Steel.—Composition of Iron and Steel, Quality, Strength, Tests, &c. II. Classification of Steel Ships. III. Considerations in making choice of Type of Vessel.—Framing of Ships. IV. Strains experienced by Ships.—Methods of Computing and Comparing Strengths of Ships. V. Construction of Ships.—Alternative Modes of Construction.—Types of Vessels.—Turret, Self Trimming, and Trunk Steamers, &c.—Rivets and Rivetting, Workmanship. VI. Pumping Arrangements. VII. Maintenance.—Prevention of Deterioration in the Hulls of Ships.—Cement, Paint, &c.—INDEX.

"So thorough and well written is every chapter in the book that it is difficult to select any of them as being worthy of exceptional praise. Altogether, the work is excellent, and will prove of great value to those for whom it is intended."—*The Engineer.*

AT PRESS. In Handsome Cloth. Very fully Illustrated.

PRESENT-DAY SHIPBUILDING.

For Shipyard Students, Ships' Officers, and Engineers.

BY THOS. WALTON,
Author of "Know Your Own Ship."

GENERAL CONTENTS.—Classification.—Materials used in Shipbuilding.—Alternative Modes of Construction.—Details of Construction.—Framing, Plating, Rivetting, Stem Frames, Twin-Screw Arrangements, Water Ballast Arrangements, Loading and Discharging Gear, &c.—Types of Vessels, including Atlantic Liners, Cargo Steamers, Oil carrying Steamers, Turret and other Self Trimming Steamers, &c.—INDEX.

NINTH EDITION. *Illustrated. Handsome Cloth, Crown 8vo.* 7s. 6d.

The Chapters on Tonnage and Freeboard have been brought thoroughly up to date, and embody the latest (1906) Board of Trade Regulations on these subjects.

KNOW YOUR OWN SHIP.

BY THOMAS WALTON, NAVAL ARCHITECT.

Specially arranged to suit the requirements of Ships' Officers, Shipowners, Superintendents, Draughtsmen, Engineers, and Others.

CONTENTS. — Displacement and Deadweight. — Moments. — Buoyancy. — Strain. — Structure. — Stability. — Rolling. — Ballasting. — Loading. — Shifting Cargoes. — Effect of Admission of Water into Ship. — Trim Tonnage. — Freeboard (Load-line). — Calculations. — Set of Calculations from Actual Drawings. — INDEX.

"The work is of the highest value, and all who go down to the sea in ships should make themselves acquainted with it."—*Shipping World* (on the new edition).

GRIFFIN'S NAUTICAL SERIES.

EDITED BY EDW. BLACKMORE,
Master Mariner, First Class Trinity House Certificate, Assoc. Inst. N.A.;
AND WRITTEN, MAINLY, by SAILORS for SAILORS.

"THIS ADMIRABLE SERIES."—*Fairplay.* "A VERY USEFUL SERIES."—*Nature.*

"EVERY SHIP should have the WHOLE SERIES as a REFERENCE LIBRARY. HANDSOMELY BOUND, CLEARLY PRINTED and ILLUSTRATED."—*Liverpool Journ. of Commerce.*

The British Mercantile Marine: An Historical Sketch of its Rise and Development. By the EDITOR, CAPT. BLACKMORE. 3s. 6d.
"Captain Blackmore's SPLENDID BOOK . . . contains paragraphs on every point of interest to the Merchant Marine. The 243 pages of this book are THE MOST VALUABLE to the sea captain that have EVER been COMPILED."—*Merchant Service Review.*

Elementary Seamanship. By D. WILSON-BARKER, Master Mariner, F.R.S.E., F.R.G.S. With numerous Plates, two in Colours, and Frontispiece. FOURTH EDITION, Thoroughly Revised. With additional Illustrations. 6s.
"This ADMIRABLE MANUAL, by CAPT. WILSON BARKER, of the 'Worcester,' seems to us PERFECTLY DESIGNED."—*Athenæum.*

Know Your Own Ship: A Simple Explanation of the Stability, Construction, Tonnage, and Freeboard of Ships. By THOS. WALTON, Naval Architect. NINTH EDITION. 7s. 6d.
"MR. WALTON'S book will be found VERY USEFUL."—*The Engineer.*

Navigation: Theoretical and Practical. By D. WILSON-BARKER and WILLIAM ALLINGHAM. SECOND EDITION, Revised. 3s. 6d.
"PRECISELY the kind of work required for the New Certificates of competency. Candidates will find it INVALUABLE."—*Dundee Advertiser.*

Marine Meteorology: For Officers of the Merchant Navy. By WILLIAM ALLINGHAM, First Class Honours, Navigation, Science and Art Department. With Illustrations and Maps, and *facsimile* reproduction of log page. 7s. 6d.
"Quite the BEST PUBLICATION on this subject."—*Shipping Gazette.*

Latitude and Longitude: How to find them. By W. J. MILLAR, C.E. SECOND EDITION, Revised. 2s.
"Cannot but prove an acquisition to those studying Navigation."—*Marine Engineer.*

Practical Mechanics: Applied to the requirements of the Sailor. By THOS. MACKENZIE, Master Mariner, F.R.A.S. SECOND EDITION, Revised. 3s. 6d.
"WELL WORTH the money . . . EXCEEDINGLY HELPFUL."—*Shipping World.*

Trigonometry: For the Young Sailor, &c. By RICH. C. BUCK, of the Thames Nautical Training College, H.M.S. "Worcester." THIRD EDITION, Revised. Price 3s. 6d.
"This EMINENTLY PRACTICAL and reliable volume."—*Schoolmaster.*

Practical Algebra. By RICH. C. BUCK. Companion Volume to the above, for Sailors and others. SECOND EDITION, Revised. Price 3s. 6d.
"It is JUST THE BOOK for the young sailor mindful of progress."—*Nautical Magazine.*

The Legal Duties of Shipmasters. By BENEDICT WM. GINSBURG, M.A., LL.D., of the Inner Temple and Northern Circuit: Barrister-at-Law. SECOND EDITION, Thoroughly Revised and Enlarged. Price 4s. 6d.
"INVALUABLE to masters. . . . We can fully recommend it."—*Shipping Gazette.*

A Medical and Surgical Help for Shipmasters. Including First Aid at Sea. By WM. JOHNSON SMITH, F.R.C.S., Principal Medical Officer, Seamen's Hospital, Greenwich. THIRD EDITION, Thoroughly Revised. 6s.
"SOUND, JUDICIOUS, REALLY HELPFUL."—*The Lancet.*

GRIFFIN'S NAUTICAL SERIES.

Introductory Volume. Price 3s. 6d.

THE

British Mercantile Marine.

BY EDWARD BLACKMORE,

MASTER MARINER; ASSOCIATE OF THE INSTITUTION OF NAVAL ARCHITECTS; MEMBER OF THE INSTITUTION OF ENGINEERS AND SHIPBUILDERS IN SCOTLAND; EDITOR OF GRIFFIN'S "NAUTICAL SERIES."

GENERAL CONTENTS.—HISTORICAL: From Early Times to 1486—Progress under Henry VIII.—To Death of Mary—During Elizabeth's Reign—Up to the Reign of William III.—The 18th and 19th Centuries—Institution of Examinations—Rise and Progress of Steam Propulsion—Development of Free Trade—Shipping Legislation, 1862 to 1875—"Lockaley Hall" Case—Shipmasters' Societies—Loading of Ships—Shipping Legislation, 1884 to 1894—Statistics of Shipping. THE PERSONNEL: Shipowners—Officers—Mariners—Duties and Present Position. EDUCATION: A Seaman's Education: what it should be—Present Means of Education—Hints. DISCIPLINE AND DUTY—Postscript—The Serious Decrease in the Number of British Seamen, a Matter demanding the Attention of the Nation.

"INTERESTING and INSTRUCTIVE . . . may be read WITH PROFIT and REJOYMENT."—*Glasgow Herald.*

"EVERY BRANCH of the subject is dealt with in a way which shows that the writer 'knows the ropes' familiarly."—*Scotsman.*

"This ADMIRABLE book . . . TEEMS with useful information—Should be in the hands of every Sailor."—*Western Morning News.*

FOURTH EDITION, *Thoroughly Revised. With Additional Illustrations. Price 6s.*

A MANUAL OF

ELEMENTARY SEAMANSHIP.

BY

D. WILSON-BARKER, MASTER MARINER; F.R.S.E., F.R.G.S., &c., &c.

YOUNGER BROTHER OF THE TRINITY HOUSE.

With Frontispiece, Numerous Plates (Two in Colours), and Illustrations in the Text.

GENERAL CONTENTS.—The Building of a Ship; Parts of Hull, Masts, &c.—Ropes, Knots, Splicing, &c.—Gear, Lead and Log, &c.—Rigging, Anchors—Sailmaking—The Sails, &c.—Handling of Boats under Sail—Signals and Signalling—Rule of the Road—Keeping and Relieving Watch—Points of Etiquette—Glossary of Sea Terms and Phrases—Index.

*** The volume contains the NEW RULES OF THE ROAD.

"This ADMIRABLE MANUAL, by CAPT. WILSON-BARKER of the 'Worcester,' seems to us PERFECTLY DESIGNED, and holds its place excellently in 'GRIFFIN'S NAUTICAL SERIES.' . . . Although intended for those who are to become Officers of the Merchant Navy, it will be found useful by ALL YACHTSMEN."—*Athenæum.*

*** For complete List of GRIFFIN'S NAUTICAL SERIES, see p. 39.

GRIFFIN'S NAUTICAL SERIES.

SECOND EDITION, *Revised and Illustrated. Price 3s. 6d.*

NAVIGATION:

PRACTICAL AND THEORETICAL.

BY DAVID WILSON-BARKER, R.N.R., F.R.S.E., &c., &c.,

AND

WILLIAM ALLINGHAM,

FIRST-CLASS HONOURS, NAVIGATION, SCIENCE AND ART DEPARTMENT.

With Numerous Illustrations and Examination Questions.

GENERAL CONTENTS.—Definitions—Latitude and Longitude—Instruments of Navigation—Correction of Courses—Plane Sailing—Traverse Sailing—Day's Work — Parallel Sailing — Middle Latitude Sailing — Mercator's Chart—Mercator Sailing—Current Sailing—Position by Bearings—Great Circle Sailing—The Tides—Questions—Appendix: Compass Error—Numerous Useful Hints. &c.—Index.

"PRECISELY the kind of work required for the New Certificates of competency in grades from Second Mate to extra Master. . . . Candidates will find it INVALUABLE."—*Dundee Advertiser.*

"A CAPITAL LITTLE BOOK . . . specially adapted to the New Examinations. The Authors are CAPT. WILSON-BARKER (Captain-Superintendent of the Nautical College, H.M.S. 'Worcester,' who has had great experience in the highest problems of Navigation), and MR. ALLINGHAM, a well-known writer on the Science of Navigation and Nautical Astronomy."—*Shipping World.*

Handsome Cloth. Fully Illustrated. Price 7s. 6d.

MARINE METEOROLOGY,

FOR OFFICERS OF THE MERCHANT NAVY.

BY WILLIAM ALLINGHAM,

Joint Author of "Navigation, Theoretical and Practical."

With numerous Plates, Maps, Diagrams, and Illustrations, and a facsimile Reproduction of a Page from an actual Meteorological Log-Book.

SUMMARY OF CONTENTS.

INTRODUCTORY.—Instruments Used at Sea for Meteorological Purposes.—Meteorological Log-Books.—Atmospheric Pressure.—Air Temperatures.—Sea Temperatures.—Winds.—Wind Force Scales.—History of the Law of Storms.—Hurricanes, Seasons, and Storm Tracks.—Solution of the Cyclone Problem.—Ocean Currents.—Icebergs.—Synchronous Charts.—Dew, Mists, Fogs, and Haze.—Clouds.—Rain, Snow, and Hail.—Mirage, Rainbows, Coronas, Halos, and Meteors.—Lightning, Corposants, and Auroras.—QUESTIONS.—APPENDIX.—INDEX.

"Quite the BEST publication, AND certainly the MOST INTERESTING, on this subject ever presented to Nautical men."—*Shipping Gazette.*

*** For Complete List of GRIFFIN'S NAUTICAL SERIES, see p. 39.

LONDON: CHARLES GRIFFIN & CO., LIMITED, EXETER STREET, STRAND.

GRIFFIN'S NAUTICAL SERIES.

SECOND EDITION, REVISED. With Numerous Illustrations. Price 3s. 6d.

Practical Mechanics:

Applied to the Requirements of the Sailor.

BY THOS. MACKENZIE,

Master Mariner, F.R.A.S.

GENERAL CONTENTS.—Resolution and Composition of Forces—Work done by Machines and Living Agents—The Mechanical Powers: The Lever; Derricks as Bent Levers—The Wheel and Axle: Windlass; Ship's Capstan; Crab Winch—Tackles: the "Old Man"—The Inclined Plane; the Screw—The Centre of Gravity of a Ship and Cargo—Relative Strength of Rope: Steel Wire, Manilla, Hemp, Coir—Derricks and Shears—Calculation of the Cross-breaking Strain of Fir Spar—Centre of Effort of Sails—Hydrostatics: the Diving-bell; Stability of Floating Bodies; the Ship's Pump, &c.

"THIS EXCELLENT BOOK . . . contains a LARGE AMOUNT of information."—*Nature.*

"WELL WORTH the money . . . will be found EXCEEDINGLY HELPFUL."—*Shipping World.*

"NO SHIPS' OFFICERS' BOOKCASE will henceforth be complete without CAPTAIN MACKENZIE'S 'PRACTICAL MECHANICS.' Notwithstanding my many years' experience at sea, it has told me *how much more there is to acquire.*"—(Letter to the Publishers from a Master Mariner).

"I must express my thanks to you for the labour and care you have taken in 'PRACTICAL MECHANICS.' . . . IT IS A LIFE'S EXPERIENCE . . . What an amount we frequently see wasted by rigging purchases without reason and accidents to spars, &c., &c.! 'PRACTICAL MECHANICS' WOULD SAVE ALL THIS."—(Letter to the Author from another Master Mariner).

WORKS BY RICHARD C. BUCK,

of the Thames Nautical Training College, H.M.S. 'Worcester.'

A Manual of Trigonometry:

With Diagrams, Examples, and Exercises. Price 3s. 6d.

THIRD EDITION, Revised and Corrected.

*** Mr. Buck's Text-Book has been SPECIALLY PREPARED with a view to the New Examinations of the Board of Trade, in which Trigonometry is an obligatory subject.

"This EMINENTLY PRACTICAL and RELIABLE VOLUME."—*Schoolmaster.*

A Manual of Algebra.

Designed to meet the Requirements of Sailors and others.

SECOND EDITION, Revised. Price 3s. 6d.

*** These elementary works on ALGEBRA and TRIGONOMETRY are written specially for those who will have little opportunity of consulting a Teacher. They are books for "SELF-HELP." All but the simplest explanations have, therefore, been avoided, and ANSWERS to the Exercises are given. Any person may readily, by careful study, become master of their contents, and thus lay the foundation for a further mathematical course, if desired. It is hoped that to the younger Officers of our Mercantile Marine they will be found decidedly serviceable. The Examples and Exercises are taken from the Examination Papers set for the Cadets of the "Worcester."

"Clearly arranged, and well got up. . . . A first-rate Elementary Algebra.—*Nautical Magazine.*

*** For complete List of GRIFFIN'S NAUTICAL SERIES, see p. 39.

GRIFFIN'S NAUTICAL SERIES.

SECOND EDITION, Thoroughly Revised and Extended. In Crown 8vo. Handsome Cloth. Price 4s. 6d.

THE LEGAL DUTIES OF SHIPMASTERS.

BY

BENEDICT WM. GINSBURG, M.A., LL.D. (CANTAB.),

Of the Inner Temple and Northern Circuit; Barrister-at-Law.

General Contents.—The Qualification for the Position of Shipmaster—The Contract with the Shipowner—The Master's Duty in respect of the Crew: Engagement Apprentices; Discipline; Provisions, Accommodation, and Medical Comforts; Payment of Wages and Discharge—The Master's Duty in respect of the Passengers—The Master's Financial Responsibilities—The Master's Duty in respect of the Cargo—The Master's Duty in Case of Casualty—The Master's Duty to certain Public Authorities—The Master's Duty in relation to Pilots, Signals, Flags, and Light Dues—The Master's Duty upon Arrival at the Port of Discharge—Appendices relative to certain Legal Matters: Board of Trade Certificates, Dietary Scales, Stowage of Grain Cargoes, Load Line Regulations, Life-saving Appliances, Carriage of Cattle at Sea, &c., &c.—Copious Index.

"No intelligent Master should fail to add this to his list of necessary books. A few lines of it may SAVE A LAWYER'S FEE, BESIDES ENDLESS WORRY."—*Liverpool Journal of Commerce.*

"SENSIBLE, plainly written, in CLEAR and NON-TECHNICAL LANGUAGE, and will be found of MUCH SERVICE by the Shipmaster."—*British Trade Review.*

SECOND EDITION, Revised. With Diagrams. Price 2s.

Latitude and Longitude:

How to Find them.

BY W. J. MILLAR, C.E.,

Late Secretary to the Inst. of Engineers and Shipbuilders in Scotland.

"CONCISELY and CLEARLY WRITTEN . . . cannot but prove an acquisition to those studying Navigation."—*Marine Engineer.*

"Young Seamen will find it HANDY and USEFUL, SIMPLE and CLEAR."—*The Engineer.*

FIRST AID AT SEA.

THIRD EDITION, Revised. With Coloured Plates and Numerous Illustrations, and comprising the latest Regulations Respecting the Carriage of Medical Stores on Board Ship. Price 6s.

A MEDICAL AND SURGICAL HELP

FOR SHIPMASTERS AND OFFICERS

IN THE MERCHANT NAVY.

BY WM. JOHNSON SMITH, F.R.C.S.,

Principal Medical Officer, Seamen's Hospital, Greenwich.

*** The attention of all interested in our Merchant Navy is requested to this exceedingly useful and valuable work. It is needless to say that it is the outcome of many years PRACTICAL EXPERIENCE amongst Seamen.

"SOUND, JUDICIOUS, REALLY HELPFUL."—*The Lancet.*

*** For Complete List of GRIFFIN'S NAUTICAL SERIES, see p. 39.

GRIFFIN'S NAUTICAL SERIES.

NINTH EDITION. *Revised, with Chapters on Trim, Buoyancy, and Calculations. Numerous Illustrations. Handsome Cloth, Crown 8vo. Price 7s. 6d.*

KNOW YOUR OWN SHIP.

BY THOMAS WALTON, NAVAL ARCHITECT.

Specially arranged to suit the requirements of Ships' Officers, Shipowners, Superintendents, Draughtsmen, Engineers, and Others.

This work explains, in a simple manner, such important subjects as:—Displacement.—Deadweight.—Tonnage.—Freeboard.—Moments.—Buoyancy.—Strain.—Structure.—Stability.—Rolling.—Ballasting.—Loading.—Shifting Cargoes.—Admission of Water.—Sail Area.—&c.

"The little book will be found EXCEEDINGLY HANDY by most officers and officials connected with shipping. . . . Mr. Walton's work will obtain LASTING SUCCESS, because of its unique fitness for those for whom it has been written."—*Shipping World.*

BY THE SAME AUTHOR.

Steel Ships: Their Construction and Maintenance.

(See page 38.)

SIXTEENTH EDITION, *Thoroughly Revised. Large 8vo, Cloth. pp.* i-xxiv+708. *With* 280 *Illustrations, reduced from Working Drawings, and* 8 *Plates.* 21*s. net.*

A MANUAL OF MARINE ENGINEERING:

COMPRISING THE DESIGNING, CONSTRUCTION, AND WORKING OF MARINE MACHINERY.

By A. E. SEATON, M.I.C.E., M.I.Mech.E., M.I.N.A.

GENERAL CONTENTS.—PART I.—Principles of Marine Propulsion. PART II.—Principles of Steam Engineering. PART III.—Details of Marine Engines: Design and Calculations for Cylinders, Pistons, Valves, Expansion Valves, &c. PART IV.—Propellers. PART V.—Boilers. PART VI.—Miscellaneous.

"The Student, Draughtsman, and Engineer will find this work the MOST VALUABLE HANDBOOK of Reference on the Marine Engine now in existence."—*Marine Engineer.*

NINTH EDITION, Thoroughly Revised. Pocket-Size, Leather. 8s. 6d.

A POCKET-BOOK OF

MARINE ENGINEERING RULES AND TABLES,

FOR THE USE OF

Marine Engineers, Naval Architects, Designers, Draughtsmen, Superintendents and Others.

BY A. E. SEATON, M.I.C.E., M.I.Mech.E., M.I.N.A.,

AND

H. M. ROUNTHWAITE, M.I.Mech.E., M.I.N.A.

"The best book of its kind, and the information is both up-to-date and reliable."—*Engineer.*

WORKS BY PROF. ROBERT H. SMITH, Assoc.M.I.C.E.,

M.I.Mech.E., M.I.E.E., M.I.Min.E., Whit. Sch., M.Ord.Medji.

THE CALCULUS FOR ENGINEERS AND PHYSICISTS,

Applied to Technical Problems.

WITH EXTENSIVE

CLASSIFIED REFERENCE LIST OF INTEGRALS.

By PROF. ROBERT H. SMITH.

ASSISTED BY

R. F. MUIRHEAD, M.A., B.Sc.,

Formerly Clark Fellow of Glasgow University, and Lecturer on Mathematics at Mason College.

In Crown 8vo, extra, with Diagrams and Folding-Plate. 8s. 6d.

"PROF. R. H. SMITH'S book will be serviceable in rendering a hard road AS EASY AS PRACTICABLE for the non-mathematical Student and Engineer."—*Athenæum.*

"Interesting diagrams, with practical illustrations of actual occurrence, are to be found here in abundance. THE VERY COMPLETE CLASSIFIED REFERENCE TABLE will prove very useful in saving the time of those who want an integral in a hurry."—*The Engineer.*

MEASUREMENT CONVERSIONS

(English and French):

43 GRAPHIC TABLES OR DIAGRAMS, ON 28 PLATES.

Showing at a glance the MUTUAL CONVERSION of MEASUREMENTS in DIFFERENT UNITS

Of Lengths, Areas, Volumes, Weights, Stresses, Densities, Quantities of Work, Horse Powers, Temperatures, &c.

For the use of Engineers, Surveyors, Architects, and Contractors.

In 4to, Boards. 7s. 6d.

*** Prof. SMITH'S CONVERSION-TABLES form the most unique and comprehensive collection ever placed before the profession. By their use much time and labour will be saved, and the chances of error in calculation diminished. It is believed that henceforth no Engineer's Office will be considered complete without them.

Pocket Size, Leather Limp, with Gilt Edges and Rounded Corners, printed on Special Thin Paper, with Illustrations, pp. i-xii + 834. Price 18s. net.

(THE NEW "NYSTROM")

THE MECHANICAL ENGINEER'S REFERENCE BOOK

A Handbook of Tables, Formulæ and Methods for Engineers, Students and Draughtsmen.

BY HENRY HARRISON SUPLEE, B.Sc., M.E.

"We feel sure it will be of great service to mechanical engineers."—*Engineering.*

LONDON: CHARLES GRIFFIN & CO., LIMITED, EXETER STREET, STRAND.

SECOND EDITION. In Large 8vo. Handsome Cloth. 16s.

CHEMISTRY FOR ENGINEERS.

BY

BERTRAM BLOUNT, F.I.C., F.C.S., A.I.C.E. AND A. G. BLOXAM, F.I.C., F.C.S.

GENERAL CONTENTS.—Introduction—Chemistry of the Chief Materials of Construction—Sources of Energy—Chemistry of Steam-raising—Chemistry of Lubrication and Lubricants—Metallurgical Processes used in the Winning and Manufacture of Metals.

"The authors have SUCCEEDED beyond all expectation, and have produced a work which should give FRESH POWER to the Engineer and Manufacturer."—*The Times.*

By the same Authors, "CHEMISTRY FOR MANUFACTURERS," see p. 71.

THE ELEMENTS OF CHEMICAL ENGINEERING. By J. GROSSMANN, M.A., Ph.D., F.I.C. With a Preface by Sir WILLIAM RAMSAY, K.C.B., F.R.S. In Handsome Cloth. With nearly 50 Illustrations. 3s. 6d. net. [See page 70.

AT PRESS. In Demy Quarto. With Diagrams and Worked Problems. 2s. 6d. net.

PROPORTIONAL SET SQUARES

APPLIED TO GEOMETRICAL PROBLEMS.

BY LIEUT.-COL. THOMAS ENGLISH, Late Royal Engineers.

WORKS BY WALTER R. BROWNE, M.A., M.INST.C.E.

THE STUDENT'S MECHANICS:

An Introduction to the Study of Force and Motion.

With Diagrams. Crown 8vo. Cloth, 4s. 6d.

"Clear in style and practical in method, 'THE STUDENT'S MECHANICS' is cordially to be recommended from all points of view."—*Athenæum.*

FOUNDATIONS OF MECHANICS.

Papers reprinted from the *Engineer.* In Crown 8vo, 1s.

Demy 8vo, with Numerous Illustrations, 9s.

FUEL AND WATER:

A Manual for Users of Steam and Water.

BY PROF. FRANZ SCHWACKHÖFER OF VIENNA, AND WALTER R. BROWNE, M.A., C.E.

GENERAL CONTENTS.—Heat and Combustion—Fuel, Varieties of—Firing Arrangements: Furnace, Flues, Chimney—The Boiler, Choice of—Varieties—Feed-water Heaters—Steam Pipes—Water: Composition, Purification—Prevention of Scale, &c., &c.

"The Section on Heat is one of the best and most lucid ever written."—*Engineer.*

GRIFFIN'S LOCAL GOVERNMENT HANDBOOKS.

WORKS SUITABLE FOR MUNICIPAL AND COUNTY ENGINEERS, ANALYSTS, AND OTHERS.

See also Davies' *Hygiene*, p. 99, and MacLeod's *Calculations*, p. 110 General Catalogue.

Gas Manufacture (The Chemistry of). A Handbook on the Production, Purification, and Testing of Illuminating Gas, and the Assay of Bye-Products. By W. J. A. BUTTERFIELD, M.A., F.I.C., F.C.S. With Illustrations. FOURTH EDITION, Revised. Vol. I., 7s. 6d. net. Vol. II., *in preparation*. [See page 77.

Water Supply: A Practical Treatise on the Selection of Sources and the Distribution of Water. By REGINALD E. MIDDLETON, M.Inst.C.E., M.Inst.Mech.E., F.S.I. With Numerous Plates and Diagrams. Crown 8vo. 8s. 6d. net. [See page 77.

Central Electrical Stations: Their Design, Organisation, and Management. By C. H. WORDINGHAM, A.K.C., M.I.C.E. SECOND EDITION. 24s. net. [See p. 48.

Electricity Control. By LEONARD ANDREWS, A.M.Inst.C.E., M.I.E.E. 12s. 6d. net. [See page 48.

Electricity Meters. By HENRY G. SOLOMON, A.M.Inst.E.E. 16s. net. [See page 49.

Trades' Waste: Its Treatment and Utilisation, with Special Reference to the Prevention of Rivers' Pollution. By W. NAYLOR, F.C.S., A.M.Inst.C.E. With Numerous Plates, Diagrams, and Illustrations. 21s. net. [See page 76.

Calcareous Cements: Their Nature, Preparation, and Uses. With some Remarks upon Cement Testing. By GILBERT REDGRAVE, Assoc.Inst.C.E., and CHAS. SPACKMAN, F.C.S. With Illustrations, Analytical Data, and Appendices on Costs, &c. 15s. net. [See page 76.

Road Making and Maintenance: A Practical Treatise for Engineers, Surveyors, and others. With an Historical Sketch of Ancient and Modern Practice. By THOMAS AITKEN, Assoc.M.Inst.C.E., M. Assoc. Municipal and County Engrs.; M. San. Inst. SECOND EDITION, Revised. Fully Illustrated. [See page 79

Light Railways at Home and Abroad. By WILLIAM HENRY COLE, M.Inst.C.E., late Deputy Manager, North-Western Railway, India. Large 8vo, Handsome Cloth, Plates and Illustrations. 16s. [See page 80.

Practical Sanitation: A Handbook for Sanitary Inspectors and others interested in Sanitation. By GEO. REID, M.D., D.P.H., Medical Officer, Staffordshire County Council. With Appendix (re-written) on Sanitary Law, by Herbert Manley, M.A., M.B., D.P.H., Barrister-at-Law. THIRTEENTH EDITION, Thoroughly Revised. 6s. [See page 78.

Sanitary Engineering: A Practical Manual of Town Drainage and Sewage and Refuse Disposal. By FRANCIS WOOD, A.M.Inst.C.E., F.G.S. SECOND EDITION, Revised. Fully Illustrated. 8s. 6d. net. [See page 75.

Dairy Chemistry: A Practical Handbook for Dairy Managers, Chemists, and Analysts. By H. DROOP RICHMOND, F.I.C., Chemist to the Aylesbury Dairy Company. With Tables, Illustrations, &c. Handsome Cloth, 16s. [See page 73.

Dairy Analysis: The Laboratory Book of. By H. DROOP RICHMOND, F.I.C. Fully Illustrated, Cloth. 2s. 6d. net. [See page 73.

Milk: Its Production and Uses. With Chapters on Dairy Farming, The Diseases of Cattle, and on the Hygiene and Control of Supplies. By EDWARD F. WILLOUGHBY, M.D. (Lond.), D.P.H. (Lond. and Camb.), 6s. net. [See page 73.

Flesh Foods: With Methods for their Chemical, Microscopical, and Bacteriological Examination. A Handbook for Medical Men, Inspectors, Analysts, and others. By C. AINSWORTH MITCHELL, B.A., F.I.C., Mem. Council Soc. of Public Analysts. With numerous Illustrations and a coloured Plate. 10s. 6d. [See page 74.

Foods: Their Composition and Analysis. By A. WYNTER BLYTH, M.R.C.S., F.C.S., Public Analyst for the County of Devon, and M. W. BLYTH, B.A., B.Sc. With Tables, Folding Plate, and Frontispiece. FIFTH EDITION, Thoroughly Revised. 21s. [See page 72.

ELECTRICAL ENGINEERING.

SECOND EDITION, *Revised. In Large 8vo. Handsome Cloth. Profusely Illustrated with Plates, Diagrams, and Figures.* 24*s. net.*

CENTRAL ELECTRICAL STATIONS:

Their Design, Organisation, and Management.

BY CHAS. H. WORDINGHAM, A.K.C., M.INST.C.E., M.INST.MECH.E.,
Late Memb. of Council Inst. E.E., and Electrical Engineer to the City of Manchester
Electrical Engineer-in-Chief to the Admiralty.

ABRIDGED CONTENTS.

Introductory.—Central Station Work as a Profession.—As an Investment.—The Establishment of a Central Station.—Systems of Supply.—Site.—Architecture.—Plant.—Boilers.—Systems of Draught and Waste Heat Economy.—Coal Handling, Weighing, and Storing.—The Transmission of Steam.—Generators.—Condensing Appliances.—Switching Gear, Instruments, and Connections.—Distributing Mains.—Insulation, Resistance, and Cost.—Distributing Networks.—Service Mains and Feeders.—Testing Mains.—Meters and Appliances.—Standardising and Testing Laboratory.—Secondary Batteries.—Street Lighting.—Cost.—General Organisation.—Mains Department.—Installation Department.—Standardising Department.—Drawing Office.—Clerical Department.—The Consumer.—Routine and Main Laying.—INDEX.

"One of the MOST VALUABLE CONTRIBUTIONS to Central Station literature we have had for some time."—*Electricity.*

In Large 8vo. Handsome Cloth. Profusely Illustrated. 12s. 6d. net.

ELECTRICITY CONTROL.

A Treatise on Electric Switchgear and Systems of Electric Transmission.

BY LEONARD ANDREWS,
Associate Member of the Institution of Civil Engineers, Member of the Institution of Electrical Engineers, &c.

General Principles of Switchgear Design.—Constructional Details.—Circuit Breakers or Arc Interrupting Devices.—Automatically Operated Circuit-Breakers.—Alternating Reverse Current Devices.—Arrangement of 'Bus Bars, and Apparatus for Parallel Running.—General Arrangement of Controlling Apparatus for High Tension Systems.—General Arrangement of Controlling Apparatus for Low Tension Systems.—Examples of Complete Installations.—Long Distance Transmission Schemes.

"Not often does the specialist have presented to him so satisfactory a book as this. . . . We recommend it without hesitation to Central Station Engineers, and, in fact, to anyone interested in the subject."—*Power.*

EIGHTEENTH EDITION. Leather, Pocket Size. 8s. 6d.

A POCKET-BOOK
OF
ELECTRICAL RULES & TABLES

FOR THE USE OF ELECTRICIANS AND ENGINEERS.

BY JOHN MUNRO, C.E., & PROF. JAMIESON, M.INST.C.E., F.R.S.E.

GENERAL CONTENTS.

Units of Measurement.—Measures.—Testing.—Conductors.—Dielectrics.—Submarine Cables.—Telegraphy.—Electro-Chemistry.—Electro-Metallurgy.—Batteries.—Dynamos and Motors.—Transformers.—Electric Lighting.—Miscellaneous.—Logarithms.—Appendices.

"WONDERFULLY PERFECT. . . . Worthy of the highest commendation we can give it."—*Electrician.*

In Large 8vo. Profusely Illustrated. 8s. 6d. net.

WIRELESS TELEGRAPHY.

BY GUSTAVE EICHHORN, PH.D.

CONTENTS.—Oscillations.—Closed Oscillation Systems.—Open Oscillation Systems.—Coupled Systems.—The Coupling Compensating the Aerial Wire.—The Receiver.—Comparative Measurement in the Sender.—Theoretical Results and Calculations in respect of Sender and Receiver.—Closely-Coupled Sender and Receiver.—Loose-Coupled Sender and Receiver.—Principal Formulæ.—The Ondameter.—Working a Wireless Telegraph Station.—Modern Apparatus and Methods of Working.—Conclusion.—Bibliography.—INDEX.

"Well written . . . and combines with a good deal of description a careful investigation of the fundamental theoretical phenomena."—*Nature.*

Large 8vo, Handsome Cloth, with 334 Pages and 307 Illustrations. 16s. net.

ELECTRICITY METERS.

BY HENRY G. SOLOMON, A.M.Inst.E.E.

CONTENTS.—Introductory.—General Principles of Continuous-Current Meters.—Continuous-Current Quantity Meters.—Continuous-Energy Motor Meters.—Different Types.—Special Purposes, *i.e.*, Battery Meters, Switchboard Meters, Tramcar Meters.—General Principles of Single- and Polyphase Induction Meters.—Single-phase Induction Meters.—Polyphase Meters.—Tariff Systems.—Prepayment Meters.—Tariff and Hour Meters.—Some Mechanical Features in Meter Design.—Testing Meters.—INDEX.

"An earnest and successful attempt to deal comprehensively with modern methods of measuring current or power in electrical installations."—*Engineering.*

"Trustworthy information. . . . We can confidently recommend the book to every electrical engineer."—*Electricity.*

SECOND EDITION, Cloth, 8s. 6d. Leather, for the Pocket, 8s. 6d.

GRIFFIN'S ELECTRICAL PRICE-BOOK: For Electrical, Civil, Marine, and Borough Engineers, Local Authorities, Architects, Railway Contractors, &c., &c. Edited by H. J. DOWSING.

"The ELECTRICAL PRICE-BOOK REMOVES ALL MYSTERY about the cost of Electrical Power. By its aid the EXPENSE that will be entailed by utilising electricity on a large or small scale can be discovered."—*Architect.*

ELECTRIC SMELTING AND REFINING. By Dr. W. BORCHERS and W. G. MCMILLAN. SECOND EDITION, Revised and Enlarged. 21s. net. [See page 67.

ELECTRO-METALLURGY, A Treatise on. By WALTER G. MCMILLAN, F.I.C., F.C.S. SECOND EDITION, Revised and in Part Re-Written. 10s. 6d. [See page 67.

ELECTRICAL PRACTICE IN COLLIERIES. By D. BURNS, M.E., M.Inst.M.E. SECOND EDITION, Revised and greatly Enlarged. 7s. 6d. net. [See page 56.

LONDON: CHARLES GRIFFIN & CO., LIMITED, EXETER STREET, STRAND.

By PROFESSORS J. H. POYNTING & J. J. THOMSON.

In Five Volumes. Large 8vo. Sold Separately.

A TEXT-BOOK OF PHYSICS.

BY

J. H. POYNTING, Sc.D., F.R.S., Late Fellow of Trinity College, Cambridge; Professor of Physics, Birmingham University.

AND

J. J. THOMSON, M.A., F.R.S., Fellow of Trinity College, Cambridge; Professor of Experimental Physics in the University of Cambridge.

INTRODUCTORY VOLUME. FOURTH EDITION, Revised. Fully Illustrated. 10s. 6d.

PROPERTIES OF MATTER.

CONTENTS. — Gravitation. — The Acceleration of Gravity. — Elasticity. — Stresses and Strains.—Torsion.—Bending of Rods.—Spiral Springs.—Collision.—Compressibility of Liquids.—Pressures and Volumes of Gases.—Thermal Effects Accompanying Strain.—Capillarity.—Surface Tension.—Laplace's Theory of Capillarity.—Diffusion of Liquids.—Diffusion of Gases.—Viscosity of Liquids.—INDEX.

"Students of physics cannot fail to derive benefit from the book."—*Knowledge.*

"We regard this book as quite indispensable not merely to teachers but to physicists of every grade above the lowest."—*University Correspondent.*

VOLUME II. FOURTH EDITION. Fully Illustrated. Price 8s. 6d

SOUND.

CONTENTS.—The Nature of Sound and its chief Characteristics.—The Velocity of Sound in Air and other Media.—Reflection and Refraction of Sound.—Frequency and Pitch of Notes.—Resonance and Forced Oscillations.—Analysis of Vibrations.—The Transverse Vibrations of Stretched Strings or Wires.—Pipes and other Air Cavities.—Rods.—Plates.—Membranes.—Vibrations maintained by Heat.—Sensitive Flames and Jets.—Musical Sand.—The Superposition of Waves.—INDEX.

"The work . . . may be recommended to anyone desirous of possessing an EASY UP-TO-DATE STANDARD TREATISE on Acoustics."—*Literature.*

"Very clearly written. . . . The names of the authors are a guarantee of the SCIENTIFIC ACCURACY and UP-TO DATE CHARACTER of the work."—*Educational Times.*

VOLUME III. SECOND EDITION, Revised. Fully Illustrated. Price 15s.

HEAT.

CONTENTS.—Temperature.—Expansion of Solids.—Liquids.—Gases.—Circulation and Convection.—Quantity of Heat; Specific Heat.—Conductivity.—Forms of Energy; Conservation; Mechanical Equivalent of Heat.—The Kinetic Theory.—Change of State; Liquid Vapour.—Critical Points.—Solids and Liquids.—Atmospheric Conditions.—Radiation.—Theory of Exchanges.—Radiation and Temperature.—Thermodynamics.—Isothermal and Adiabatic Changes.—Thermodynamics of Changes of State, and Solutions.—Thermodynamics of Radiation.—INDEX.

"Well up-to-date, and extremely clear and exact throughout. . . . As clear as it would be possible to make such a text-book."—*Nature.*

Remaining Volumes in Preparation—

LIGHT; MAGNETISM AND ELECTRICITY.

THE MEAN DENSITY OF THE EARTH: An Essay to which the Adams Prize was adjudged in 1893 in the University of Cambridge. By J. H. POYNTING, Sc.D., F.R.S., Late Fellow of Trinity College, Cambridge; Professor of Physics, Birmingham University. In Large 8vo, with Bibliography, Illustrations in the Text, and Seven Lithographed Plates. 12s. 6d.

"Cannot fail to be of GREAT and GENERAL INTEREST."—*Athenæum.*

Griffin's Geological, Prospecting, Mining, and Metallurgical Publications.

		PAGE
Geology, Stratigraphical,	R. Etheridge, F.R.S.,	52
,, Practical Aids,	Prof. Grenville Cole,	52
,, Open Air Studies,	,, ,,	85
Mining Geology,	James Park, F.G.S.,	56
Prospecting for Minerals,	S. Herbert Cox, A.R.S.M.,	53
Food Supply,	Robt. Bruce,	53
Ore and Stone Mining,	Sir C. Le Neve Foster,	54
Elements of Mining,	,, ,,	54
Coal Mining,	H. W. Hughes, F.G.S.,	55
Practical Coal Mining,	G. L. Kerr, M.Inst.M.E.,	55
Elementary ,,	,, ,,	55
Elect. Colliery Practice,	D. Burns,	56
Mine-Surveying,	Bennett H. Brough, A.R.S.M.,	56
Mine Air, Investigation of,	Foster and Haldane,	54
Mining Law,	C. J. Alford,	57
Blasting and Explosives,	O. Guttmann, A.M.I.C.E.,	58
Testing Explosives,	Bichel and Larsen,	58
Shaft Sinking,	J. Riemer,	58
Mine Accounts,	Prof. J. G. Lawn,	57
Mining Engineers' Pkt.-Bk.,	E. R. Field, M.Inst.M.M.,	57
Petroleum,	Sir Boverton Redwood,	61
A Handbook on Petroleum,	Thomson and Redwood,	61
Oil Fuel,	Sidney H. North,	61
Mineral Oil Testing,	J. Hicks,	61
Metallurgical Analysis,	Macleod and Walker,	60
Microscopic Analysis,	F. Osmond & J. E. Stead, F.R.S.,	60
Metallurgy (General),	Phillips and Bauerman,	60
,, (Elementary),	Prof. Humboldt Sexton,	66
Getting Gold,	J. C. F. Johnson, F.G.S.,	59
Cyanide Process,	James Park, F.G.S.,	59
Cyaniding,	Julian and Smart,	59
Electric Smelting,	Borchers and McMillan,	67
Electro-Metallurgy,	W. G. McMillan, F.I.C.,	67
Assaying,	J. J. & C. Beringer,	66
Metallurgical Analysis,	J. J. Morgan, F.C.S.,	66
Metallurgy (Introduction to),	Sir W. Roberts-Austen, K.C.B.,	63
Gold, Metallurgy of,	Dr. Kirke Rose, A.R.S.M.,	63
Lead and Silver, ,,	H. F. Collins, A.R.S.M.,	64
Iron, Metallurgy of,	Thos. Turner, A.R.S.M.,	65
Steel, ,,	F. W. Harbord,	65
General Foundry Practice,	McWilliam and Longmuir,	68
Iron-Founding,	Prof. Turner,	68
Precious Stones,	Dr. Max Bauer,	68

LONDON: CHARLES GRIFFIN & CO., LIMITED, EXETER STREET, STRAND.

Demy 8vo, Handsome cloth, 34s.

Stratigraphical Geology & Palæontology,

ON THE BASIS OF PHILLIPS.

By ROBERT ETHERIDGE, F.R.S.,

OF THE NATURAL HIST. DEPARTMENT, BRITISH MUSEUM, LATE PALÆONTOLOGIST TO THE GEOLOGICAL SURVEY OF GREAT BRITAIN, PAST PRESIDENT OF THE GEOLOGICAL SOCIETY, ETC.

With Map, Numerous Tables, and Thirty-six Plates.

"No such compendium of geological knowledge has ever been brought together before."—*Westminster Review.*

"If PROF. SEELEY's volume was remarkable for its originality and the breadth of its views, Mr. ETHERIDGE fully justifies the assertion made in his preface that his book differs in construction and detail from any known manual. . . . Must take HIGH RANK AMONG WORKS OF REFERENCE."—*Athenæum.*

AIDS IN PRACTICAL GEOLOGY:

WITH A SECTION ON PALÆONTOLOGY.

By PROFESSOR GRENVILLE COLE, M.R.I.A., F.G.S.

FIFTH EDITION, Thoroughly Revised. With Frontispiece and Illustrations. Cloth. 10s. 6d.

GENERAL CONTENTS.—

PART I.—SAMPLING OF THE EARTH'S CRUST.
PART II.—EXAMINATION OF MINERALS.
PART III.—EXAMINATION OF ROCKS.
PART IV.—EXAMINATION OF FOSSILS.

"DESERVING OF THE HIGHEST PRAISE. Here indeed are 'Aids' INNUMERABLE and INVALUABLE. All the directions are given with the utmost clearness and precision."—*Athenæum.*

"That the work deserves its title, that it is full of 'AIDS,' and in the highest degree 'PRACTICAL,' will be the verdict of all who use it."—*Nature.*

OPEN-AIR STUDIES IN GEOLOGY:

An Introduction to Geology Out-of-doors.

By PROFESSOR GRENVILLE COLE, M.R.I.A., F.G.S.

For details, see Griffin's Introductory Science Series, p. 85.

Crown 8vo. Handsome Cloth. 2s. 6d.

RESEARCHES ON THE PAST AND PRESENT HISTORY OF THE EARTH'S ATMOSPHERE.

Including the latest Discoveries and their Practical Applications.

By DR. THOMAS LAMB PHIPSON.

PART I.—The Earth's Atmosphere in Remote Geological Periods.
PART II.—The Atmosphere of our present period. Appendices; Index.

"The book should prove of interest to general readers, as well as to meteorologists and other students of science."—*Nature.*

GRIFFIN'S "NEW LAND" SERIES.

Practical Hand-Books for the Use of Prospectors, Explorers, Settlers, Colonists, and all Interested in the opening up and Development of New Lands.

EDITED BY GRENVILLE A. J. COLE, M.R.I.A., F.G.S.,
Professor of Geology in the Royal College of Science for Ireland, and Examiner in the University of London.

In Crown 8vo. Handsome Cloth. 5s.
With Numerous Maps Specially Drawn and Executed for this Work.

NEW LANDS:
THEIR RESOURCES AND PROSPECTIVE ADVANTAGES.

BY HUGH ROBERT MILL, D.Sc., LL.D., F.R.S.E.,

"A want admirably supplied. . . . Has the advantage of being written by a professed Geographer."—*Geographical Journal.*

With many Engravings and Photographs. Handsome Cloth, 4s. 6d.

FOOD SUPPLY.

BY ROBERT BRUCE,
Agricultural Superintendent to the Royal Dublin Society.

With Appendix on Preserved Foods by C. A. MITCHELL, B.A., F.I.C.

"The work is one which will appeal to those intending to become farmers at home or in the Colonies, and who desire to obtain a general idea of the true principles of farming in ALL ITS BRANCHES."—*Journal of the Royal Colonial Inst.*

FOURTH EDITION, *Revised. With Illustrations. Handsome Cloth, 5s.*

PROSPECTING FOR MINERALS.

A Practical Handbook for Prospectors, Explorers, Settlers, and all Interested in the Opening up and Development of New Lands.

BY S. HERBERT COX, Assoc.R.S.M., M.Inst.M.M., F.G.S.,
Professor of Mining at the Royal School of Mines.

GENERAL CONTENTS.—Introduction and Hints on Geology—The Determination of Minerals: Use of the Blow-pipe, &c.—Rock-forming Minerals and Non-Metallic Minerals of Commercial Value: Rock Salt, Borax, Marbles, Lithographic Stone, Quartz and Opal, &c., &c.—Precious Stones and Gems—Stratified Deposits: Coal and Ores—Mineral Veins and Lodes—Irregular Deposits—Dynamics of Lodes: Faults, &c.—Alluvial Deposits—Noble Metals: Gold, Platinum, Silver, &c.—Lead—Mercury—Copper—Tin—Zinc—Iron—Nickel, &c.—Sulphur, Antimony, Arsenic, &c.—Combustible Minerals—Petroleum—General Hints on Prospecting—Glossary—Index.

"This ADMIRABLE LITTLE WORK . . . written with SCIENTIFIC ACCURACY in a CLEAR and LUCID style. . . . An IMPORTANT ADDITION to technical literature . . . —*Mining Journal.*

LONDON: CHARLES GRIFFIN & CO., LIMITED, EXETER STREET, STRAND.

Twenty-third Annual Issue. Handsome cloth, 7s. 6d.

(To Subscribers, 6s.).

THE OFFICIAL YEAR-BOOK

OF THE

SCIENTIFIC AND LEARNED SOCIETIES OF GREAT BRITAIN AND IRELAND.

COMPILED FROM OFFICIAL SOURCES.

Comprising (together with other Official Information) LISTS of the PAPERS read during the Session 1905-1906 before all the LEADING SOCIETIES throughout the Kingdom engaged in the following Departments of Research:—

§ 1. Science Generally: *i.e.*, Societies occupying themselves with several Branches of Science, or with Science and Literature jointly.
§ 2. Mathematics and Physics.
§ 3. Chemistry and Photography.
§ 4. Geology, Geography, and Mineralogy.
§ 5. Biology, including Microscopy and Anthropology.
§ 6. Economic Science and Statistics.
§ 7. Mechanical Science, Engineering, and Architecture.
§ 8. Naval and Military Science.
§ 9. Agriculture and Horticulture.
§ 10. Law.
§ 11. Literature.
§ 12. Psychology.
§ 13. Archæology.
§ 14. MEDICINE.

"FILLS A VERY REAL WANT."—*Engineering.*

"INDISPENSABLE to any one who may wish to keep himself abreast of the scientific work of the day."—*Edinburgh Medical Journal.*

"The YEAR-BOOK OF SOCIETIES is a Record which ought to be of the greatest use for the progress of Science."—*Lord Playfair, F.R.S., K.C.B., M.P., Past-President of the British Association.*

"It goes almost without saying that a Handbook of this subject will be in time one of the most generally useful works for the library or the desk."—*The Times.*

"British Societies are now well represented in the 'Year-Book of the Scientific and Learned Societies of Great Britain and Ireland.'"—(Art. "Societies" in New Edition of "Encyclopædia Britannica," vol. xxii.)

Copies of the FIRST ISSUE, giving an Account of the History, Organization, and Conditions of Membership of the various Societies, and forming the groundwork of the Series, may still be had, price 7/6. *Also Copies of the Issues following.*

The YEAR-BOOK OF SOCIETIES forms a complete INDEX TO THE SCIENTIFIC WORK of the sessional year in the various Departments. It is used as a HANDBOOK in all our great SCIENTIFIC CENTRES, MUSEUMS, and LIBRARIES throughout the Kingdom, and has become an INDISPENSABLE BOOK OF REFERENCE to every one engaged in Scientific Work.

READY IN OCTOBER EACH YEAR.

LONDON: CHARLES GRIFFIN & CO., LIMITED, EXETER STREET, STRAND.